DC ELECTRICAL SYSTEM

WIRING DIAGRAM #200360 – CATALINA YACHTS

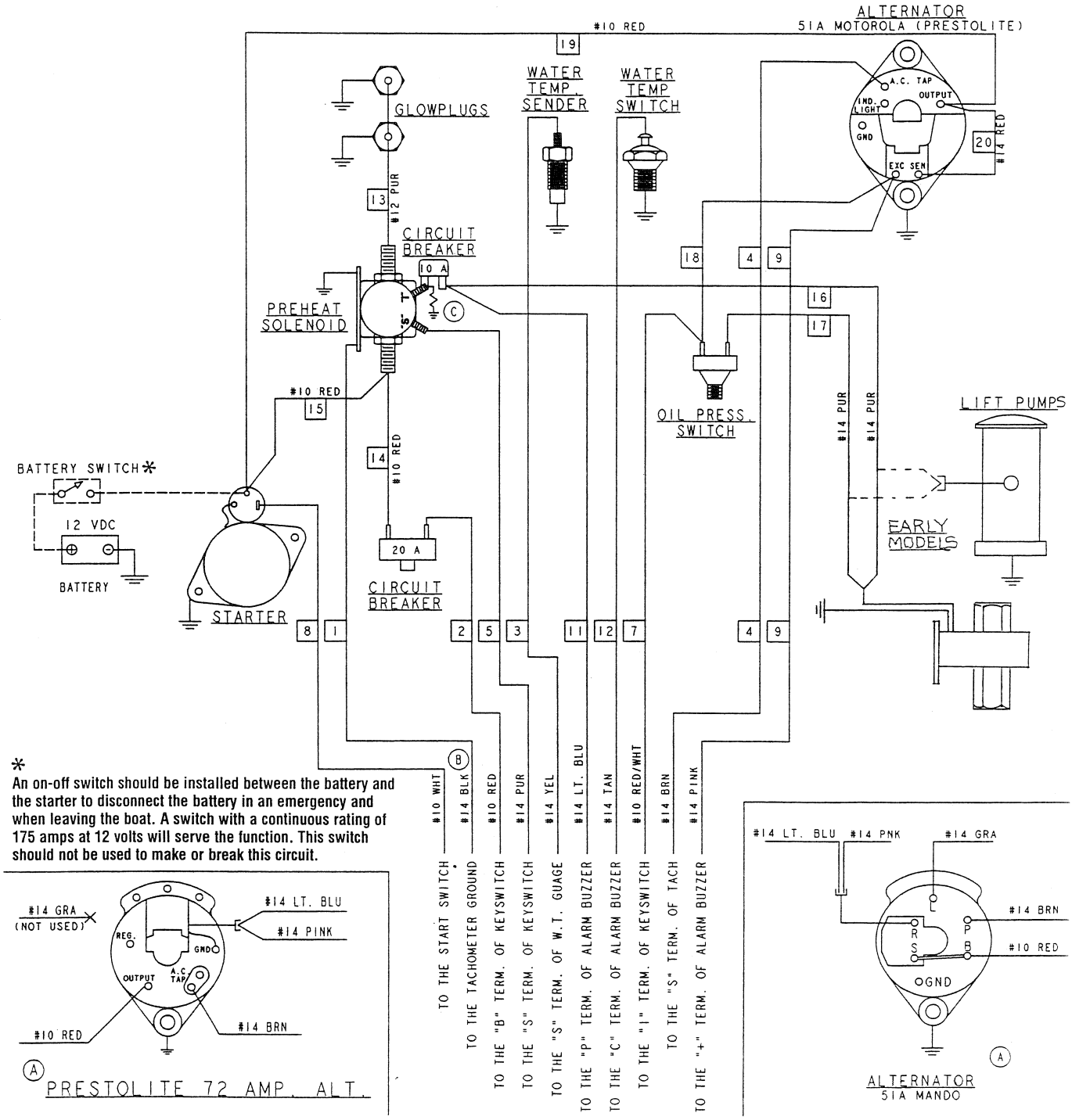

*
An on-off switch should be installed between the battery and the starter to disconnect the battery in an emergency and when leaving the boat. A switch with a continuous rating of 175 amps at 12 volts will serve the function. This switch should not be used to make or break this circuit.