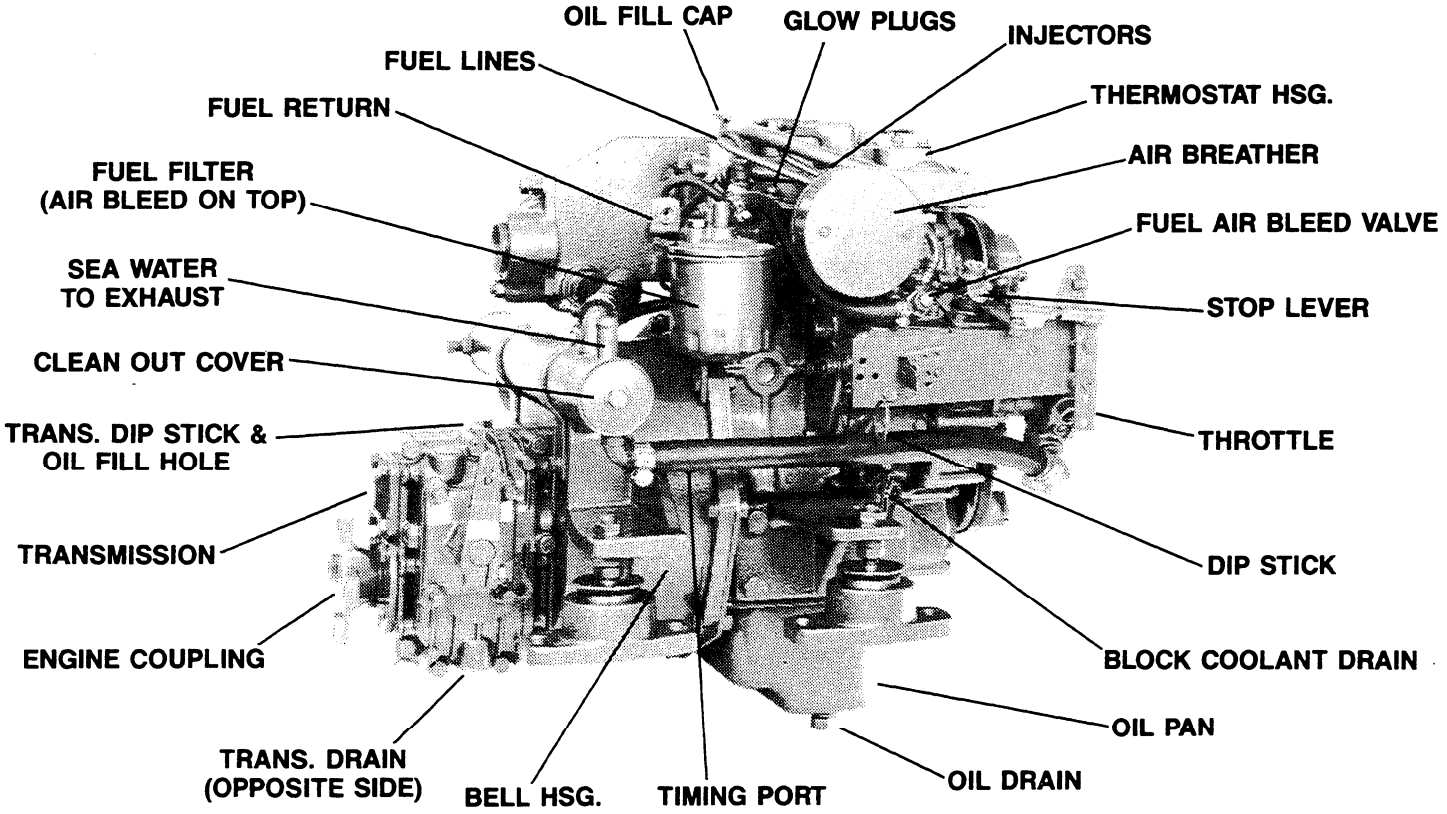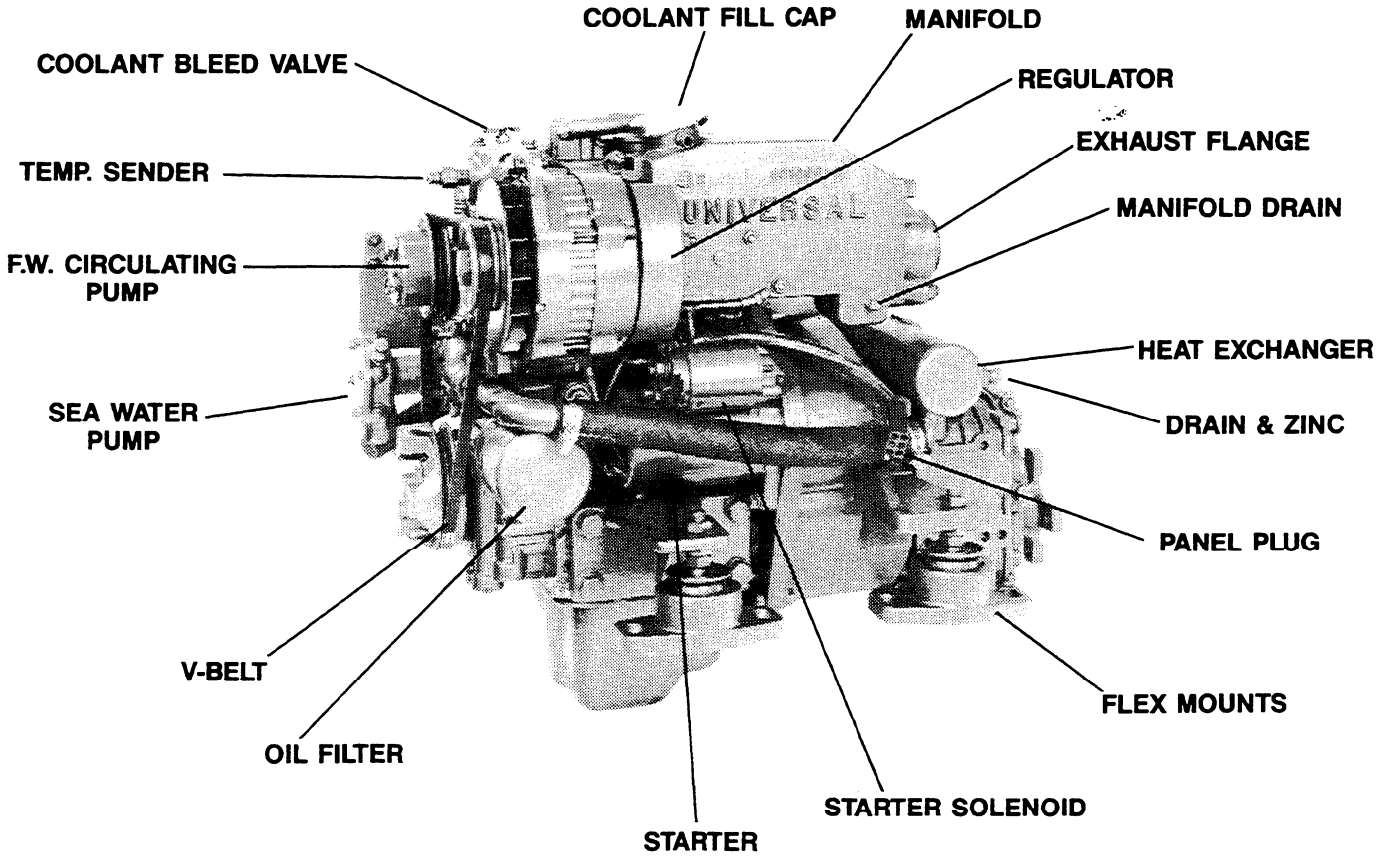UNIVERSAL MODEL M-12