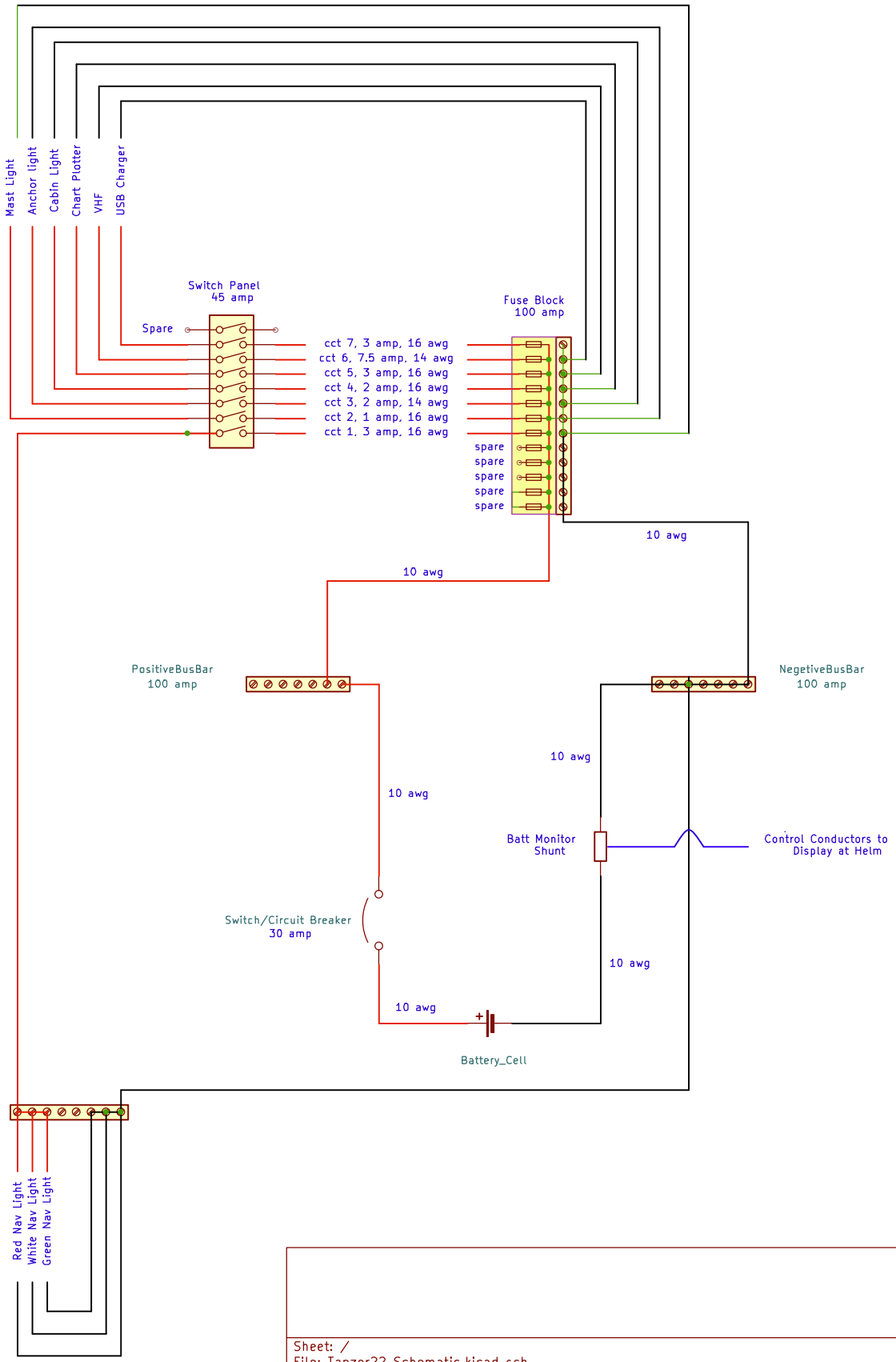

Sheet: /
File: Tanzer22 Schematic.kicad_sch

Title: Tanzer 22: As The Crow Flies

Size: USLetter	Date: 2025-11-30	Rev:
KiCad E.D.A. 9.0.6		Id: 1/1