Smart Energy Control Instruction and Use Manual.

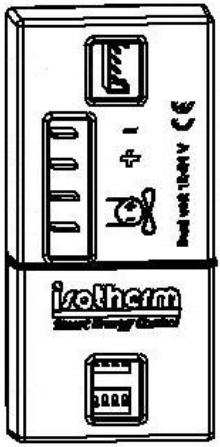

Indel Webasto Marine s.r.l.

47866 S. Agata Feltria (RN) Italy

Phone + 39 0541 848030

info@indelwebastomarine.com

Table of Contents:

Ch. 1): Introduction - Page 3

Ch. 2): Kit Components - Page 4

Ch. 3): Compatibility and Warnings - Page 6

Ch. 4): Installing the Potentiometer - Page7

Ch. 5): Installing the Sensor - Page 12

Ch. 6): Introduction to Dip Switch Setting - Page 15

Ch. 7): Setting the Functions - Page 17

Ch. 8): Installing the SEC Unit - Page 25

Ch. 9): Switching On and Checks - Page 26

Ch. 10): Technical Notes - Page 42

Caution: before installing the product, read the warnings in Chapter 3 on page 6 of this Manual and follow them carefully.

This manual is available in other languages on www.indelwebastomarine.com

1) Introduction:

With the Isotherm Smart Energy Control system, Indel Webasto Marine offers its clients the opportunity to reduce the power consumption of their on board refrigeration systems. This kit can be easily installed in order to update and improve the energy-saving capabilities of your product. The new CRUISE Elegance Line is already equipped with a pre-moulded slot in the cabinet.

How it works:

The sophisticated technology of the processor-based Isotherm Smart Energy Control system ensures significant energy savings by continuously scanning a series of key environmental factors, such as internal temperature and system supply voltage, in order to determine the compressor speed and maximise performance with lowest consumptions.

The device not only makes your refrigerator intelligent, but also enables a significant amount of cold energy in food and drinks to be stored. The cooling energy is stored in the refrigerated cabinet whenever a power surplus is available (with the motor running or with a connection to the mains), and this is reused while the refrigeration system is powered by the batteries only. The Isotherm Smart Energy Control system reduces the temperature of the cabinet more than traditional refrigerators, without freezing the food. The temperature is continuously monitored by a sensor that transmits signals to the control unit, which in turn manages the compressor speed.

The results:

A saving of up to 35% thanks to more efficient use of the compressor and up to 50% thanks to the combined effects of the cooling energy stored in the food and drinks.

2) Kit Components:

code: **SED00033AA**

Fig. 1

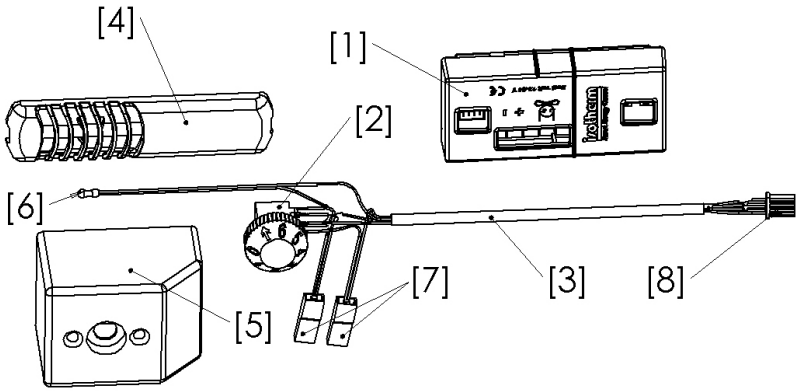

[1]: Smart Energy Control (SEC) unit
[2]: Temperature controller, potentiometer and dial
[3]: Connection and temperature data transmission cable
[4]: Grille and temperature sensor support [6]
[5]: Potentiometer support/housing
[6]: Temperature sensor
[7]: Power supply for any lamp, green cable (+), yellow cable (-).
[8]: Cable connector for data transmission and temperature control to be inserted in the SEC unit.
[9]: Soft Putty.
[10]: Aluminum Scotch.

Fig. 2

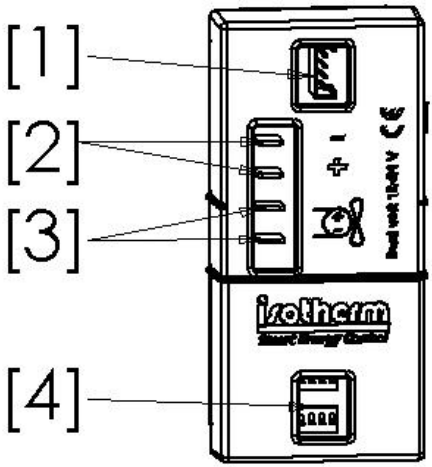

[1]: connection for the cable communicating the temperature data and controlling the potentiometer temperature.
[2]: connection for the main power supply.
[3]: connection for the condenser cooling fan power supply
[4]: switch configuration area.

3) Compatibility and Warnings:

Where it can be installed: In all refrigeration systems, both fridges and freezers with Secop/Danfoss DB35 or DB50 compressor and Danfoss 101N0210/220/230 circuit boards with visible evaporator.

Temperature range:

Refrigerator:	from 50°F (10°C) to 33,8°F (1°C)
Freezer:	from 30,2°F (-1°C) to the limit of the refrigeration system

Warnings:

- **All work must be carried out in a safe environment using secure methods, by qualified personnel only.**
- **The device must be disconnected from all power sources.**
- **Before making any hole or securing anything, check that you are not piercing or damaging the refrigeration system or the electrical circuit. Contact a service centre if necessary.**
- **Before securing and installing the various components, make sure that the connection and temperature data transmission cable Fig. 3 Page 9 [3] and the temperature sensor cable Fig. 1 Page 4 [6] (see specifications in Ch. 5 Page 12), are long enough to be installed and connected to the Smart Energy Control unit Fig. 1 Page 4 [1], which must then be coupled to the Secop/Danfoss unit, see Fig. 6 Page 25.**
- **Indel Webasto Marine is in no way responsible for any harm caused to persons, animals or property caused by incorrect installation.**

4) Installing the Potentiometer

The potentiometer can be installed inside the cabinet to be refrigerated if the system is a fridge. It is advisable to install it outside the cabinet if the system is a freezer. The potentiometer can be installed in the same housing where the mechanical thermostat was installed, or it is possible to use the support supplied in the **KIT N° SED00033AA**

Securing the potentiometer inside the existing housing or lamp:

- Unscrew and remove the housing of the existing thermostat. Where the lamp for internal light can be built into the thermostat support, such as in the CRUISE ELEGANCE LINE version, remove the lamp glass and disconnect the lamp power cables in order to access the fixing screws.
- Make a Ø0,5in (Ø13mm) through-hole on the cabinet inside the area with the thermostat support (on the CR EL version, this is marked on the outside with a pre-stamped hole on the metal sheet) Fig. 3 Page 9 [1]. Where the pre-stamped hole is not marked, make sure that there are no evaporators, condensers, cooling circuit, anti-condensation pipes or electrical cables underneath.
- Pass the control cable and the temperature sensor Fig. 1 Page 4 [6,8], but not the connection for the internal light (cables with green "+" and yellow "-" Crimp terminals connectors) Fig. 1 Page 4 [7] from the inside towards the outside of the housing, through the drilled hole.
- Remove the existing thermostat and replace it with the potentiometer, which must be secured with the nut as supplied. Before securing the potentiometer permanently, insert the temperature control dial and

turn it clockwise, until hearing a click that determines the 0 position and system switch-off.

- Make sure that the position mark on the lamp is set to 0 on the dial. If it is not, turn the potentiometer gently, taking care not to damage the rear connections, until 0, system switch-off, is on the indicator and tighten the nut as required so that the potentiometer cannot rotate.
- Make sure that the internal light power supply cables Fig. 1 Page 4 [7], if present, remain accessible after having secured the potentiometer support. **N.B. the lamp must be the same voltage as the main power supply and the maximum power must be 3 Watt).**
- Re-secure the housing using the screws removed earlier.
- Seal the hole made for installing the temperature sensor and control cables using the soft putty supplied in the kit or marine silicone or polyurethane foam, ensuring that no material leaks out of the cabinet.
- Connect the internal light power supply connectors to the lamp contacts (cables with green "+" and yellow "-" Crimp terminals cables) Fig. 1 Page 4 [7], if present. **N.B. the lamp must be the same voltage as the main power supply and the maximum power must be 3 Watt)**

Fig. 3

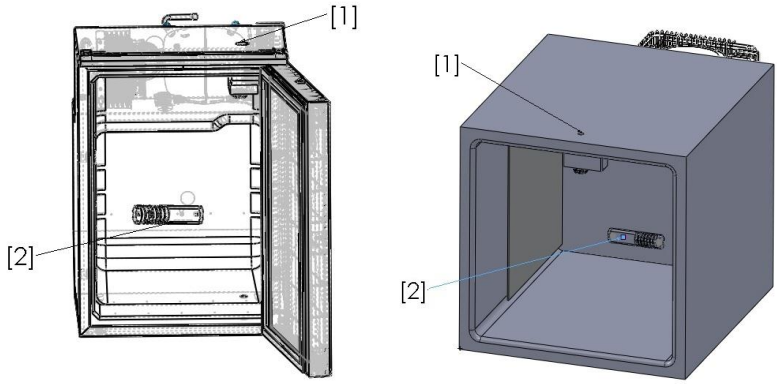

[1] Ø0,5in (Ø13mm) hole for installing the cable for communicating the temperature data and controlling the thermostat/electronic potentiometer temperature.
[2] Grille and air temperature sensor support.

Securing the potentiometer inside the refrigerated cabinet with the housing supplied in the KIT N° SED00033AA:

- Find a convenient, accessible position to secure the potentiometer holder housing Fig. 1 Page 4 [5] inside the cabinet. The position must allow:
- the control cable Fig. 1 Page 4 [3] to reach the SEC unit mounted on the compressor.
- the temperature sensor Fig. 1 Page 4 [6] (including the 20-27in (50-70cm) to be built into the sensor holder grille Fig. 1 Page 4 [4]) to be installed inside the cabinet in the correct position to be defined before starting to secure the kit.
- Make a Ø0,5in (Ø13mm) through-hole on the cabinet inside the support area, making sure that there are no evaporators, condensers, cooling circuit , anti-condensation pipes or electrical cables underneath.
- Pass the control cable and the temperature sensor Fig. 1 Page 4 [6,8], but not the connection for the internal

light (cables with green "+" and yellow "-" crimp terminals connectors) Fig. 1 Page 4 [7] from the inside towards the outside of the housing, through the hole.

- Insert the potentiometer inside the housing. It must be secured with the nut supplied. Before securing the potentiometer permanently, insert the temperature control dial and turn it clockwise, if possible, until hearing a click that determines the 0 position and system switch-off.
- Make sure that the position mark on the lamp is set to 0 on the dial. If it is not, turn the potentiometer gently, taking care not to damage the rear connections, until 0 is on the indicator and tighten the nut as required so that the potentiometer cannot rotate.
- Secure the potentiometer holder housing and make sure that the internal light power supply cables Fig. 1 Page 4 [7], if present, remain accessible after having secured the potentiometer support. **N.B**. **the lamp must be the same voltage as the main power supply and the maximum power must be 3 Watt).**
- Seal the hole using the soft putty supplied in the kit or polyurethane foam or marine silicone, ensuring that no material leaks into the potentiometer support housing.
- Connect the internal light power supply connectors to the lamp contacts (cables with green "+" and yellow "-" crimp terminals cables) Fig. 1 Page 4 [7], if present. **N.B. <u>the lamp must be the same voltage as the main power supply and the maximum power must be 3 Watt)</u>**

Securing the potentiometer outside the refrigerated cabinet with the housing supplied in the KIT N° SED00033AA:

- Find a convenient, accessible position to secure the potentiometer holder housing Fig. 1 Page 4 [5] outside the cabinet. The position must allow:
    - The control cable Fig. 1 Page 4 [3] to reach the SEC unit mounted on the compressor.
    - The temperature sensor Fig. 1 Page 4 [6] (including the 20-27in (50-70cm) to be built into the sensor holder grille Fig. 1 Page 4 [4]) to be installed inside the cabinet in the correct position to be defined before starting to secure the kit.
- Insert the potentiometer inside the housing. It must secured with the supplied nut. Before securing the potentiometer permanently, insert the temperature control dial and turn it clockwise, if possible, until hearing a click that determines the 0 position and system switch-off.
- Make sure that the position mark on the housing is set to 0 on the dial. If it is not, turn the potentiometer gently, taking care not to damage the rear connections, until 0 is on the indicator and fasten the nut as required so that the potentiometer cannot rotate.
- Secure the potentiometer housing and make sure that the internal light power supply cables, are accessible (cables with green "+" and yellow "-" crimp terminals connectors) Fig. 1 Page 4 [7].
- Seal the hole using the soft putty supplied in the kit or polyurethane foam or marine silicone, ensuring that no material leaks into the potentiometer support housing.
- Connect the internal light power supply connectors to the lamp contacts (cables with green "+" and yellow "-" crimp terminals cables) Fig. 1 Page 4 [7], if present. **N.B. <u>the lamp must be the same voltage as the main</u>**

power supply and the maximum power must be 3 Watt),

5) Installing the Sensor:

- Find the correct position where to secure the temperature sensor holder grille Fig. 1 Page 4 [4] inside the cabinet, bearing the following rules in mind:
- The temperature sensor holder grille Fig. 1 Page 4 [4] must be secured inside the cabinet, as far away as possible from the evaporator or cooling plate and in most cases 2in (5cm) from the bottom.
- Check and make sure that there are no evaporators, condensers, refrigeration system pipes or cables at the back. It is not advisable to install it in products with built-in evaporator.
- Once a possible position to secure the sensor holder grille Fig. 1 Page 4 [4] has been found, check that the length of the sensor cable Fig. 1 Page 4 [6] is sufficient to be installed, considering the 20-27in (50-70cm) of cable that needs to be wrapped inside the grille itself Fig. 1 Page 4 [4], to prevent heat transmission through the electrical cable crossing the cabinet from the outside to the inside, in order to prevent interference caused by heat conduction due to correct operation of the SEC system.
- In order to install the sensor support grille and temperature sensor, make a 0,27in (Ø7mm) through-hole from the outside to the inside Fig. 4 Page 13 [3]. The hole must come out at the covered part of the grille.

Fig. 4

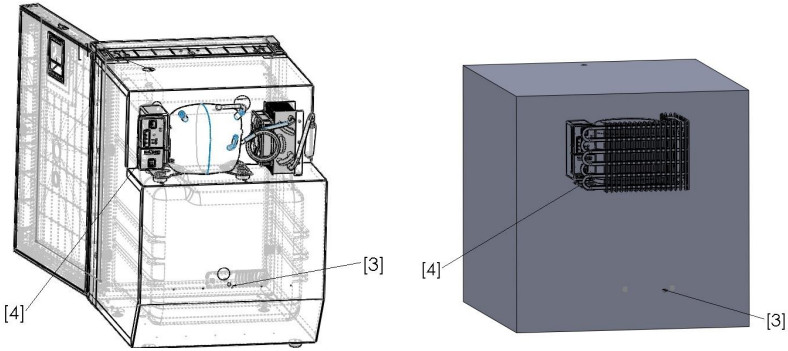

[3] 0,27in (Ø7mm) through-hole from the outside to the inside the cabinet to insert the temperature sensor.
[4] **Smart Energy Control** circuit board

Make the two slots to secure the grille by making two 0,27in (Ø7mm) holes Fig. 5 Page 14. The hole must only pass through the internal lining and must not reach outside the refrigerator.

Fig. 5

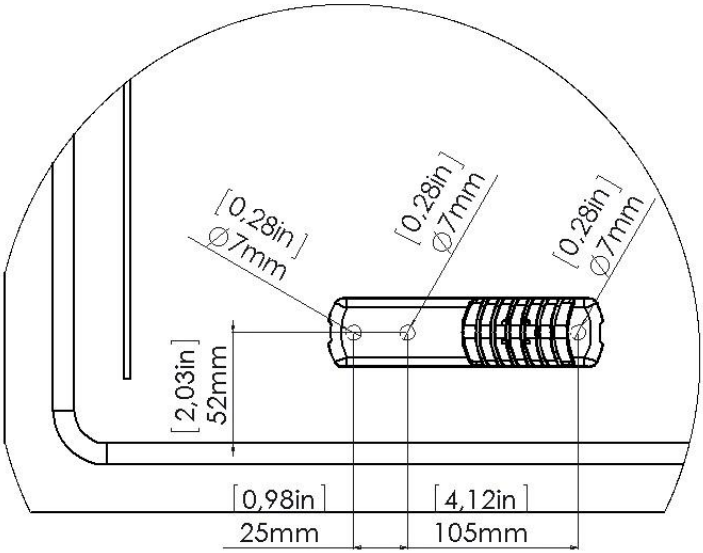

Insert the temperature sensor Fig. 1 Page 4 [6] from the outside towards the inside of the cabinet, **wrap 20-27in (50-70cm) of the excess cable inside the slot formed in the covered part of the grille**, and finally insert the sensor inside the small sensor holder tube, which must be inserted inside the special slot behind the grille. Close the sensor cable through-hole using the soft putty supplied in the kit or marine silicone, making sure that material does not leak into the cabinet.
Insert the 2 pins in the holes made in the grille and press until completely resting on the cabinet.

Cover all cables on the outside of the fridge cabinet with the aluminum scotch supplied in the kit.

6) Introduction to Dip Switch Setting:

Below, we show the configuration of the dip switches on the ISOTHERM Smart Energy Control unit for system configuration. There are two series of dip switches:

Dip Switch

				1
y	y	y	y	0
[VLS]	**[R/F]**	**[T/φT]**		

				1
y	y	y	y	0
[BAT]	**[OFFSET]**			

[OFFSET] compensates for the difference in temperature detected by the sensor and the actual temperature inside the cabinet.
[BAT] is the degree of protection of the battery determined by the minimum operating voltage of the board.
[T/φT] is the degree of energy/temperature saving to be achieved.
[R/F] selects the type of system - Refrigerator or Freezer.
[VLS] selects the tension level when the system goes in cool storage modality.

The Smart Energy Control unit must be programmed using two sets of dip switches based on four criteria Fig. 2 Page 5 [4]:

OFFSET: In most cases, the temperature sensor should be positioned in the lower part of the cabinet and naturally detects the temperature at that point. It is important to know the temperature gap between that point and a point inside the desired cabinet. It is normally necessary to measure in the middle of the cabinet at the same height in which the sensor is installed in order to check the internal temperature correctly. These dip switches are programmed to manage this difference proportionally.

Battery protection [BAT]: when the voltage supplied by the battery falls below a certain level, the unit turns off or prevent the compressor to start. With this dip switch, you can choose at which voltage the system protects the battery.

Temperature [T] and Delta [φT]: This dip switch determines which temperature [T] is to be achieved inside the cabinet in automatic and energy saving mode. The φT determines when the compressor starts to work in variable mode. For the Refrigerator system, the system starts to modulate at twice the selected temperature. For the Freezer system, this is 5,4°F(3°C) before reaching the selected temperature.

Refrigerator/Freezer [R/F]: This dip switch selects whether the system to be controlled is a Refrigerator (fridge system) or a Freezer.

[VLS]: This dip switch selects the voltage level in which the system goes in cold storing modality, when the potentiometer is positioned in Automatic Modality. Make sure your battery reaches the voltage chosen when it is being charged (by running engine or by battery charger).

7) Setting the Functions:

Before to set the dip-switches, remove the plastic protection that cover them.

Select the battery protection setting according to the configuration below:

[Bat]

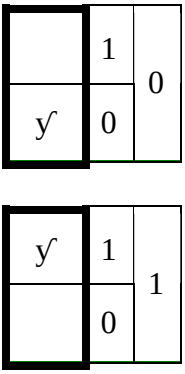

Sel.	Battery protection (V) Switch-off with voltages below:	
V.bat	12 VDC - off	24 VDC - off
0	V<9.6	V<21.3
1	V<10.8	V<23.6

Battery protection selection: is the minimum voltage level on the control unit for which the system can operate

Selects the level tension when the system goes in cool storage modality.

[VLS]

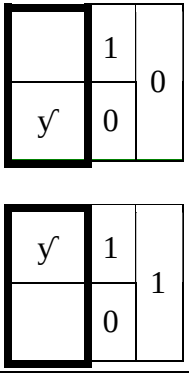

Sel.	**Voltage level of the cold storing modality:**	
Volt Storage	System at 12 Vdc	System at 24 Vdc
0	13,2 Vdc	25,2 Vdc
1	12,7 Vdc	24,7 Vdc

Voltage Level Storage selection: is the voltage level for storage in which the system goes in cold storing modality, the chosen depends on type of battery.

Select the refrigeration system - fridge or freezer

[R/F]

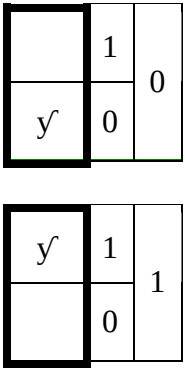

Sel.	**[R] / [F]**
0	[Refrigerator]
1	[Freezer]

Fridge [R] / Freezer [F] mode selection

Select the standard Fridge configuration Fridge, if a fridge system was selected beforehand:

Standard Fridge configuration
Dip Switch

		y		**1**
y	y		y	**0**
[VLS]	**[R/F]**	**[T/φT]**		

	y			**1**
y		y	y	**0**
[BAT]	**[Offset]**			

Or select one of the four standard freezer configurations if a freezer system was selected beforehand, according to the type.

Standard Freezer configuration
Dip Switch
with maximum freezer temperature
colder than -7,6°F (-22 °C)

	y	y	y	**1**
y				**0**
[VLS]	**[R/F]**	**[T/qΓ]**		

	y		y	**1**
y		y		**0**
[BAT]	**[Offset]**			

Standard Freezer configuration
Dip Switch
with maximum freezer temperature
between -7,6°F (-22 °C) and -0,4°F (-18 °C)

	y	y		**1**
y			y	**0**
[VLS]	**[R/F]**	**[T/φΓ]**		

	y		y	**1**
y		y		**0**
[BAT]	**[Offset]**			

Standard Freezer configuration
Dip Switch
with maximum freezer temperature
between -0,4°F (-18 °C) and 3,2°F (-16 °C)

	y		y	**1**
y		y		**0**
[VLS]	**[R/F]**	**[T/qΓ]**		

	y		y	**1**
y		y		**0**
[BAT]	**[Offset]**			

Standard Freezer configuration
Dip Switch
with maximum freezer temperature
between 3,2°F (-16 °C) and 10,4°F (-12 °C)

	y			**1**
y		y	y	**0**
[VLS]	**[R/F]**	**[T/φT]**		

	y		y	**1**
y		y		**0**
[BAT]	**[Offset]**			

Standard Freezer configuration
Dip Switch
Maximum temperature freezer warmer than
10,4°F (-12 °C) Not Recommended

Below is a summary table for standard refrigerator/freezer configuration specifications in automatic mode:

Table [1]:

Selected system in automatic mode ↓ Automatic Mode Standard Configurations	**Energy Saving Mode** **T °F(°C)** **VDC<=13,2(12,7) or VDC<=25,2(24,7)**	**Energy Accumulation Mode** **T °F(°C)** **VDC>13,2(12,7) or VDC>25,2(24,7)**
Fridge	=qt= 41 (+5)	33,8 (+1)
Freezer T<-7,6°F(-22°C)	=qt= 3,2 (-16)	Ð
Freezer -7,6°F(-22°C)<T< -0,4°F (-18°C)	=qt= 6,8 (-14)	Ð
Freezer -0,4°F (-18°C)<T<3,2°F (-16°C)	=qt= 14 (-10)	Ð
Freezer 3,2°F (-16°C)<T<10,4°F(-12°C)	=qt=17,6 (-8)	Ð
Compressor Speed	Variable	Maximum rpm

8) Installing the SEC Unit:

After configuring the Smart Energy Control unit according to the refrigeration system and personal requirements, proceed as follows:

- Insert the Smart Energy Control unit Fig. 6 Page 25 [2] on the black Secop/Danfoss control unit Fig. 6 Page 25 [1], making sure all the pins are aligned and inserted correctly.

Fig. 6

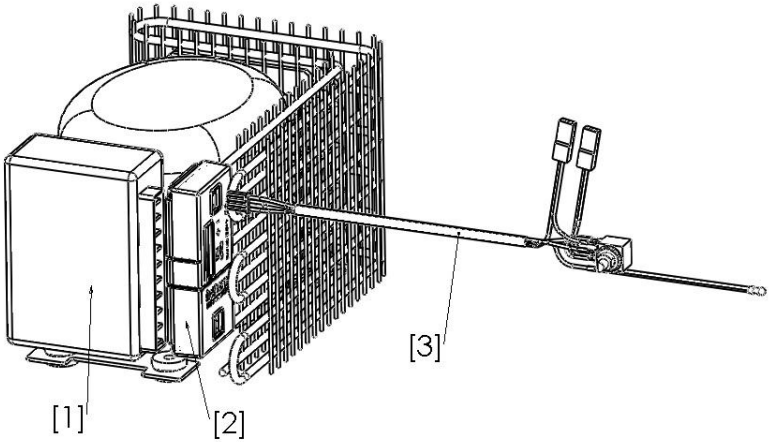

- Secure the control cable Fig. 6 Page 25 [3], running it along a wall or corner of the cabinet, securing it with tape and making sure that the cables cannot get damaged during fridge installation.
- Connect the control cable Fig. 6 Page 25 [3] on the SEC unit Fig. 6 Page 25 [2].
- Connect the fan power cords Fig. 2 Page 5 [3], if present, respecting the polarity, red cable (+) and black cable (-).

9) Switching On and Checks:

- Make sure the system is switched off by turning the dial on the electronic potentiometer anti-clockwise as far as it will go, if possible, until you hear a click that determines the 0 system switch-off position.
- Connect the main 12/24 VDC power supply on the SEC unit Fig. 2 Page 5 [2], respecting the polarity. The BLACK cable is normally the negative pole (-) and the RED cable is normally the positive pole (+). The power supply must always be protected by an automatic fuse or circuit breaker. Power breaker must be 15 Amp for a 12 VDC power system and 7.5 Amp for a 24 VDC power system. Check that the cross-section of the main power cable respects the cross-section indicated in the table below. The length of the main power cable must be calculated between the control unit and the batteries or the control unit and the electrical distribution panel:

Table [2]:

Cross-section in mm^2	AWG cross-section	Max 12 V cable length mt/ft	Max 24 V cable length mt/ft
2.5	13	2.5 / 8	5 / 16
4	11	4 / 13	8 / 26
6	9	6 / 19	12 / 39
10	7	10 / 33	20 / 66

In order to turn on the system, turn the dial clockwise, setting the dial on the graduated scale from 1 to ↓.
The compressor should come on and the condenser cooling fan should start up after a few moments (pay attention to the rotation of the fan blades).
Setting the potentiometer on the scale up to 6, the system will work in manual mode, (over 5, the system could enter automatic mode). Setting the potentiometer to ↓, the system will enter in automatic mode. The table below shows the table with the theoretical data corresponding to the scale:

Table [3]:

Dial position	Fridge temperature in °F(° C)	Freezer temperature in °F(°C)
1	48(8,7) [max. 50(10)]	24(-4,3) [max. 30,2(-1)]
2	45(7,4)	18(-7,6)
3	43(6,1)	12(-11) (see the freezer limit)
4	40,6(4,8)	6,8(-14) (see the freezer limit)
5	38(3,5)	0,5(-17,5) (see the freezer limit)
6	36(2,2) [min 33,8(1)]	-5,5(-20,8)[min -11,2 (-24)] (see the freezer limit)
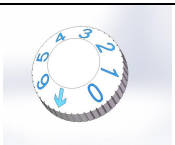 ↓ Automatic Mode	V<13,2(12,7) or V<25,2(24,7) T=qt V>13,2(12,7) or V>25,2(24,7) T=33,8(1)	V<13,2(12,7) or V<25,2(24,7) T=qt V>13,2(12,7) or V>25,2(24,7) T=Đ

N.B. the data shown in the table may be subject to a variation of an average of +/- 10%. The temperature should normally be measured at the same height from the bottom at which the temperature sensor grid has been installed or, in special cases, in a point defined by the user.

Switching on (automatic mode): turn the dial clockwise as far as it will go, marked by the symbol ↓. In this position, the system will enter automatic mode. In this mode, we can check correct system operation as follows:

Fridge system:
Starting from the standard configuration for a fridge system, switch the unit on and move the dial to its maximum in the ↓ position. Operate the system with a voltage on the SEC unit greater than 13,2(12,7) VDC or 25,2(24,7) VDC to fall within storage mode (check that the voltage is greater that the data shown when the compressor is operating), for at least 24 hours so that the system is at full speed and stabilised. Insert a (digital) thermometer at the same height at which the temperature probe is positioned.
If the <u>average</u> temperature is between 32,9°F(0.5°C) and 35,6°F(2°C), the system is working properly.
If the average temperature detected is less than 32,9°F (0,5°C) or some products are frozen, adjust the OFFSET configuration as described above. Starting from the standard configuration, increase the offset by one setting in order to increase the average temperature by 2,7°F(1,5°C). Repeat the check as soon as the fridge stabilises.

Standard Configuration

		y		**1**
y	y		y	**0**
[VLS]	**[R/F]**	**[T/φΓ]**		

	y			**1**
y		y	y	**0**
[BAT]	**[Offset]**			

Modified configuration to increase
the average temperature by 2,7°F(1,5°C).

				1
				0
[VLS]	**[R/F]**	**[T/φΓ]**		

	y		y	**1**
		y		**0**
[BAT]	**[Offset]**			

If the average temperature detected is higher than 35,6°F(2°C), adjust the OFFSET configuration as described above. Starting from the standard configuration, increase the offset by one setting in order to reduce the average temperature by 2,7°F(1,5°C). Repeat the check as soon as the fridge stabilises.

Standard Configuration

		y		**1**
y	y		y	**0**
[VLS]	**[R/F]**	**[T/qΓ]**		

	y			**1**
y		y	y	**0**
[BAT]	**[Offset]**			

See configuration on the next page.

Modified configuration to decrease
the average temperature by 2,7°F(1,5°C).

				1
				0
[VLS]	**[R/F]**	**[T/φT]**		

		y	y	**1**
	y			**0**
[BAT]	**[Offset]**			

When the voltage is V<13,2(12,7) or V<25,2(24,7) DC, it is necessary to check that the average temperature is the same as the selected qpt value. In the standard Fridge configuration, qpt = 41°F(5°C) **(**to vary the qpt value, see Table 4.1 page 35).

Freezer mode: the way to check correct operation in Freezer mode is to power the fridge at a voltage of V<13,2(12,7) or V<25,2(24,7) DC, energy saving mode. Turn the system on and set it to automatic mode, moving the temperature control dial to the ↓ position.
Wait until the internal temperature has stabilised and check the temperature at a point in the middle of the freezer. If the measured temperature is within +/- 3,6°F(2°C) of the **qpt** temperature for the selected configuration (see TABLE [1] Page 24), the system is working correctly.
If the temperature measured is more than 3,6°F(2°C) warmer than the **qpt** temperature for the selected configuration (see TABLE [1] Page 24) and the system completes the cycle, it is necessary to intervene on the offset configuration, switching to the lower offset e.g.

Standard Freezer Dip Switch configuration with maximum freezer temperature between -7,6°F (-22°C) and -0,4°F (-18°C)

	y		y	**1**
y		y		**0**
[VLS]	**[R/F]**	**[T/qΓ]**		

	y		y	**1**
y		y		**0**
[BAT]	**[Offset]**			

Modified configuration
to reduce the average temperature by 2,7°F (1,5°C)

				1
				0
[VLS]	**[R/F]**	**[T/qΓ]**		

	y			**1**
		y	y	**0**
[BAT]	**[Offset]**			

If the temperature measured is more than 3,6°F(2°C) warmer than the **<u>qt</u>** temperature for the selected configuration (see TABLE [1] Page 24) and the system never stops, the configuration selected is not suitable for the refrigeration system. The system has insufficient refrigerating power. Switch to a lower configuration and repeat the test e.g.

Standard Freezer Dip Switch configuration with maximum freezer temperature between -7,6°F (-22°C) and -0,4°F (-18°C)

	y		y	**1**
y		y		**0**
[VLS]	**[R/F]**	**[T/qT]**		

	y		y	**1**
y		y		**0**
[BAT]	**[Offset]**			

See configuration on the next page.

Standard Freezer Dip Switch configuration with maximum freezer temperature between -0,4°F (-18°C) and 3,2°F (-16°C)

		y		**1**
			y	**0**
[VLS]	**[R/F]**	**[T/φT]**		

				1
				0
[BAT]	**[Offset]**			

If the temperature measured is more than 3,6°F(2°C) colder than the **qt** temperature for the selected configuration (see TABLE [1] Page 24), intervene on the offset configuration, switching to the next offset, then repeat the test e.g.

Standard Freezer configuration
Dip Switch -0,4°F(-18°C)<T<3,2°F(-16°C)

	y		y	**1**
y		y		**0**
[VLS]	**[R/F]**	**[T/qT]**		

	y		y	**1**
y		y		**0**
[BAT]	**[Offset]**			

See configuration on the next page.

Standard Freezer configuration
Dip Switch -0,4°F(-18°C)<T<3,2°F(-16°C)

				1
				0
[VLS]	**[R/F]**	**[T/qT]**		

	y	y		**1**
			y	**0**
[BAT]	**[Offset]**			

Possible qt temperature configurations in automatic and energy saving mode: it is possible to vary the temperature inside the cabinet by adjusting the configuration. See fig. below:

Table [4]

[T/φΓ]

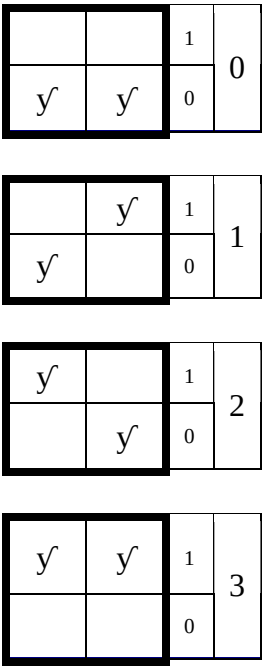

Table [4.1]:

	T/φΓ (°C)	
	Fridge Mode	
	T [°F(°C)] Temperature in Auto and E.S. mode	**Modulation start temperature φΓ in E.S. [°F(°C)]**
0	37,4(3)	42,8(6)
1	39,2(4)	46,4(8)
2	41(5)	50(10)
3	42,8(6)	53,6(12)

Table [4.2]:

	T/φΓ [°F(°C)]	
	Freezer Mode	
	T [°F(°C)] Temperature in Auto and E.S. mode	**Modulation start temperature φΓ in E.S. [°F(°C)]**
0	17,6(-8)	23(-5)
1	14(-10)	19,4(-7)
2	6,8(-14)	12,2(-11)
3	3,2(-16)	8,6(-13)

T/φΓ (°C)

Select the temperature in automatic mode during energy saving [ES]. In refrigerators, the number of revolutions of the compressor starts to modulate at twice the selected temperature. In freezers, it is at 5,4°F (3°C) warmer than the temperature selected.

Possible temperature calibration or compensation configurations inside the cabinet:

[Offset]

			1	0
y	y	y	0	

		y	1	1
y	y		0	

	y		1	2
y		y	0	

	y	y	1	3
y			0	

y			1	4
	y	y	0	

Table [5]:

Sel.	Offset °F(°C)
0	-2,7(-1,5)
1	0
2	+2,7(+1,5)
3	+5,4(+3)
4	+8,1(+4,5)
5	+10,8(+6)
6	+13,5(+7,5)
7	+16,2(+9)

Cabinet Temperature Compensation [Offset]:

This is the temperature compensation value that is introduced between the value measured by the probe and the actual temperature detected. The temperature is normally detected at the same height at which the probe is installed

y		y	1	5
	y		0	

y	y		1	6
		y	0	

y	y	y	1	7
			0	

10) Technical Notes:

Main voltage range:

12 VDC system:	from 9.6 VDC to 17.0 VDC
24 VDC system:	from 19.0 VDC to 31.5 VDC
Working temperature:	from 14°F(-10°C) to 158°F(70°C)
Storage temperature:	from -40°F(-40°C) to 185°F(85°C)

Operation:

Fridge mode:

Manual:	from 50°F(+10°C) to 33,8°F(1°C)
Automatic:	with V>13,2(12,7) VDC and V>25,2(24,7) VDC 33,8°F: **1°C**, with V<=13,2(12,7) VDC and V<=25,2(24,7) VDC: **temperature = qt**

Motor speed

Maximum:	with V>13,2(12,7) VDC and V>25,2(24,7) VDC
Variable:	with V<=13,2(12,7) VDC and V<=25,2(24,7) VDC

Freezer mode:

Manual:	from 30,2°F(-1°C) to -11,2°F (-24°C)
Automatic:	with V>13,2(12,7) VDC and V>25,2(24,7) VDC: **Ð°F(°C)** with V<=13,2(12,7) VDC and V<=25,2(24,7) VDC: **temperature = qt**

Motor speed

Maximum:	with V>13,2(12,7) VDC and V>25,2(24,7) VDC
Variable:	with V<=13,2(12,7) VDC and V<=25,2(24,7) VDC

The symbol on the product, package or relative documentation indicates the product cannot be disposed of among house wastes. The product must be taken to an authorised point for the recycling of electric and electronic devices. Always dispose of the product in the respect of the local environmental dispositions of wastes. For more info on disposal, recycling and re-usage of the product please contact the local authorities, the local waste service or the dealer the product has been bought from.

The package is made of recyclable material. The package shows the recyclable symbols and must be taken to a collection point.

The symbol means the product is compliant to all the European dispositions that foresee its usage.

This document is the property of Indel Webasto Marine s.r.l.,
and may not be reproduced in whole or in part without consent.
The manual may be changed without notice.