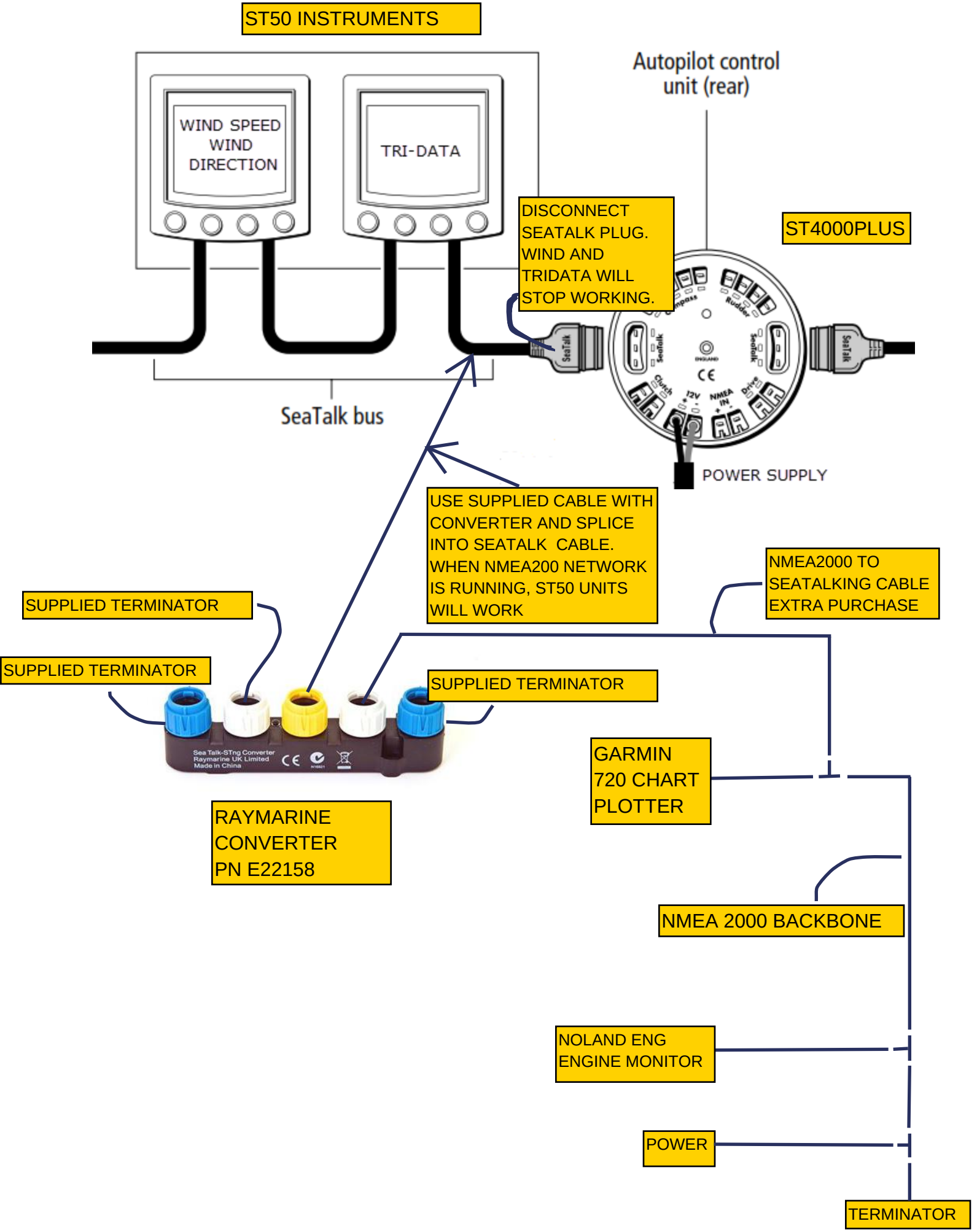
ST50 INSTRUMENTS
WIND SPEED
WIND
DIRECTION
TRI-DATA
Autopilot control
unit (rear)
DISCONNECT SEATALK PLUG. WIND AND TRIDATA WILL STOP WORKING.
ST4000PLUS
SeaTalk bus
POWER SUPPLY
USE SUPPLIED CABLE WITH CONVERTER AND SPLICE INTO SEATALK CABLE. WHEN NMEA200 NETWORK IS RUNNING, ST50 UNITS WILL WORK
NMEA2000 TO SEATALKING CABLE EXTRA PURCHASE
SUPPLIED TERMINATOR
SUPPLIED TERMINATOR
SUPPLIED TERMINATOR
Sea Talk-STng Converter
Raymarine UK Limited
Made in China
GARMIN 720 CHART PLOTTER
RAYMARINE CONVERTER PN E22158
NMEA 2000 BACKBONE
NOLAND ENG ENGINE MONITOR
POWER
TERMINATOR