Beneteau Repurposed 3 Switch

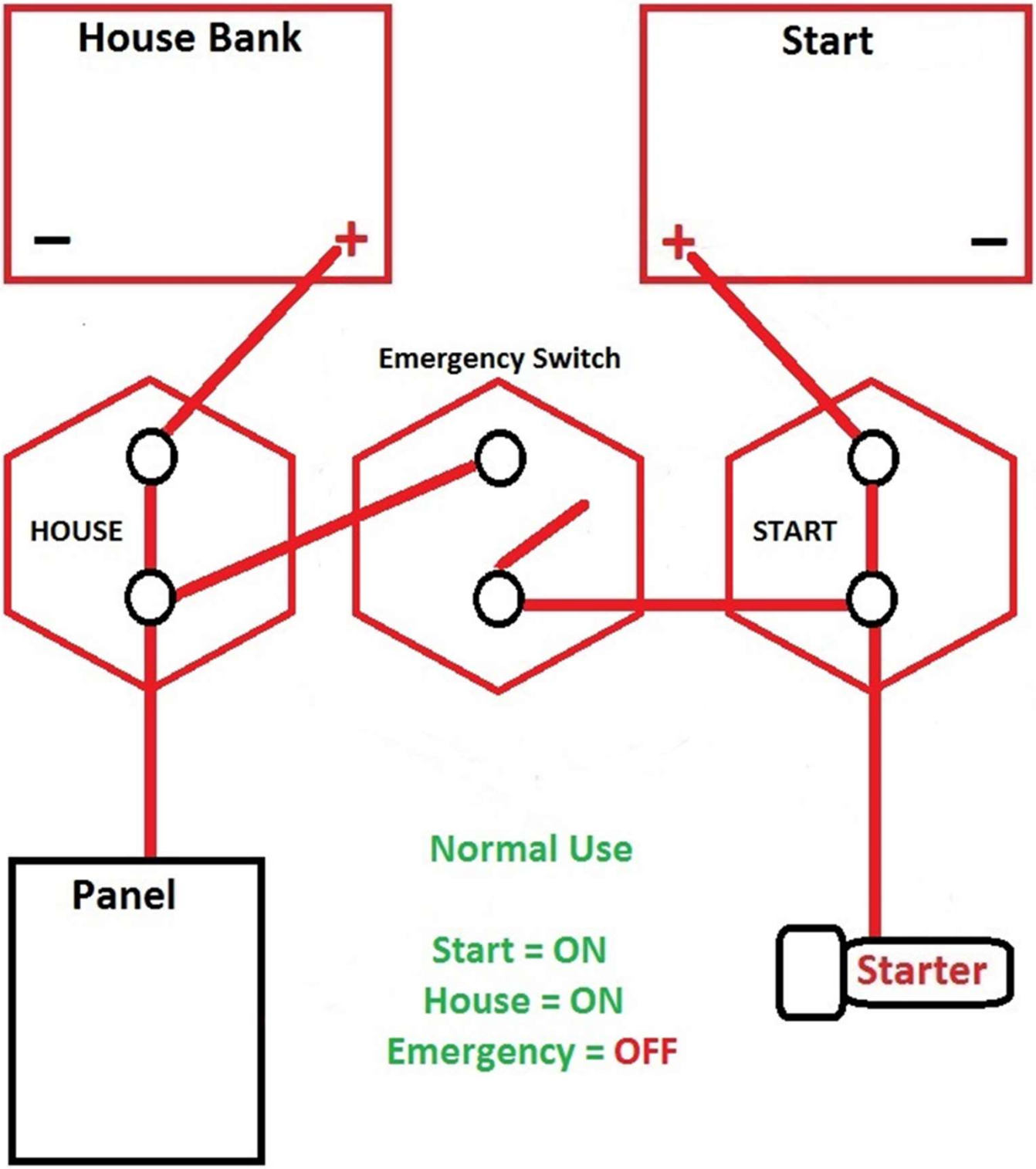

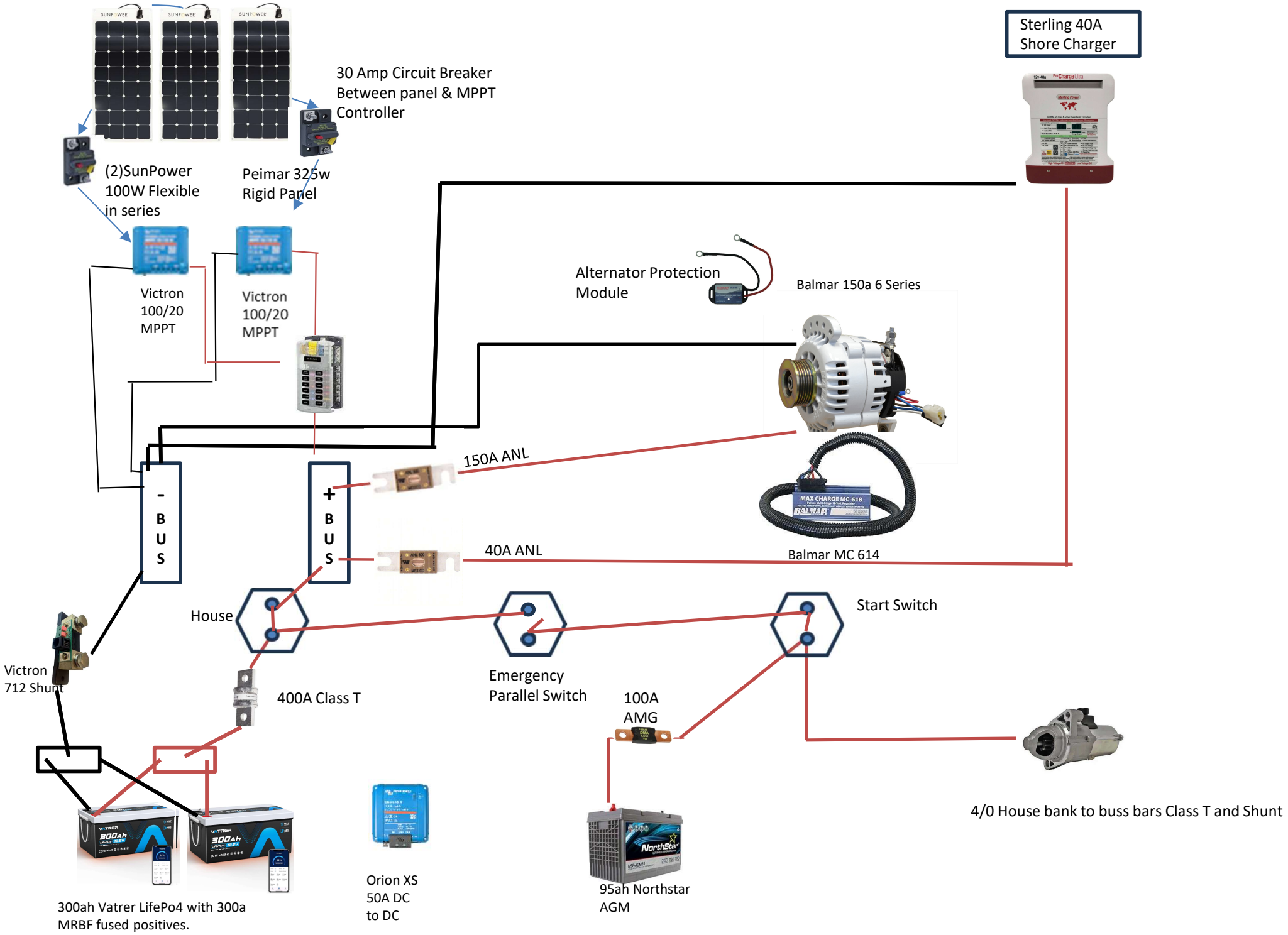
Sterling 40A
Shore Charger
30 Amp Circuit Breaker
Between panel & MPPT
Controller
(2)SunPower
100W Flexible
in series
Peimar 325w
Rigid Panel
Victron
100/20
MPPT
Victron
100/20
MPPT
Alternator Protection
Module
Balmar 150a 6 Series
150A ANL
40A ANL
Balmar MC 614
- B U S
+ B U S
House
Start Switch
Victron
712 Shunt
400A Class T
Emergency
Parallel Switch
100A
AMG
4/0 House bank to buss bars Class T and Shunt
300ah Vatrer LifePo4 with 300a
MRBF fused positives.
Orion XS
50A DC
to DC
95ah Northstar
AGM