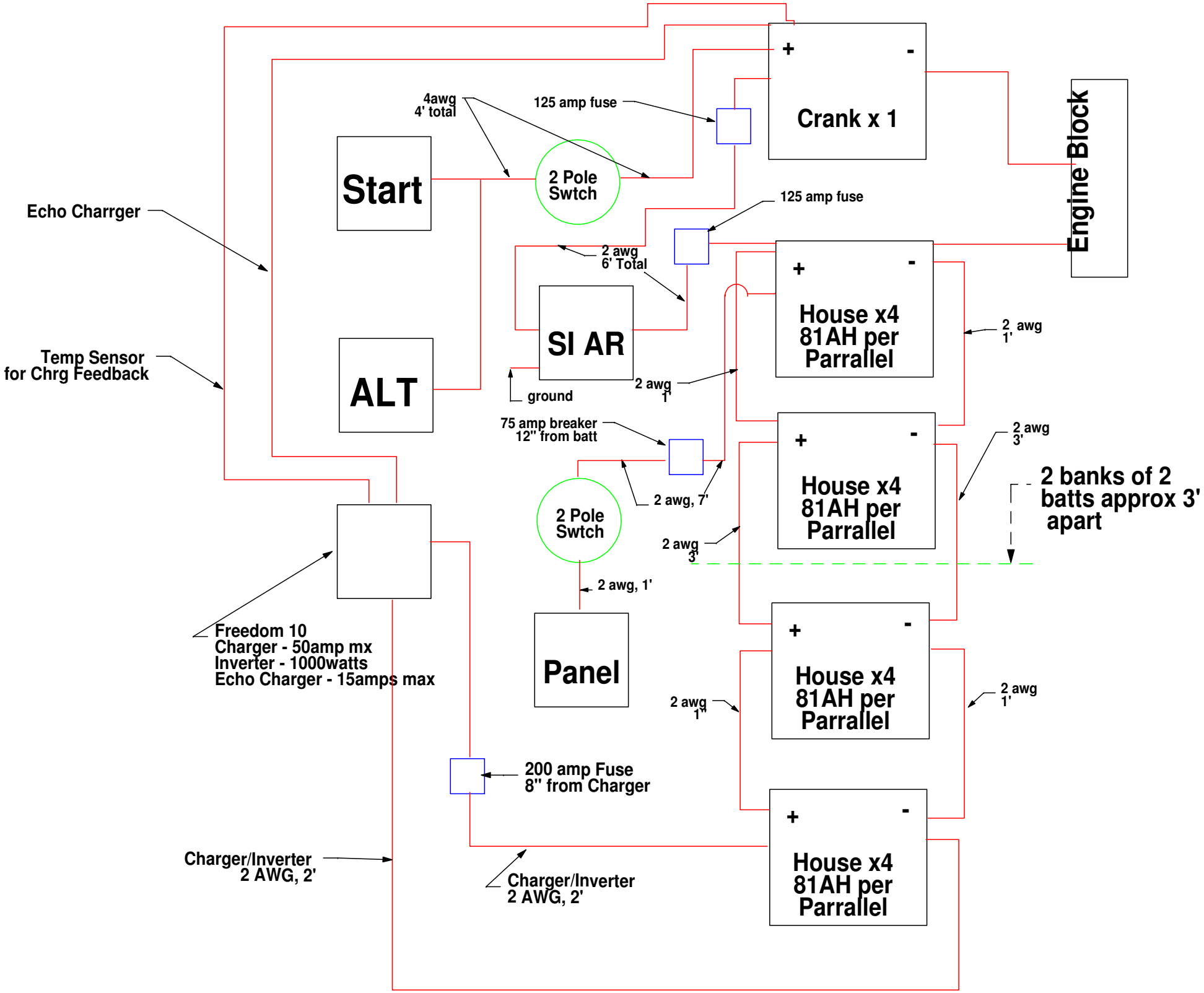
Crank x 1
+
-
Engine Block
4awg
4' total
125 amp fuse
Start
2 Pole
Swtch
Echo Charrger
125 amp fuse
2 awg
6' Total
House x4
81AH per
Parrallel
2 awg
1'
SI AR
Temp Sensor
for Chrg Feedback
ALT
ground
2 awg
1'
75 amp breaker
12" from batt
2 awg
3'
2 banks of 2
batts approx 3'
apart
2 awg, 7'
2 Pole
Swtch
2 awg
3'
2 awg, 1'
Freedom 10
Charger - 50amp mx
Inverter - 1000watts
Echo Charger - 15amps max
Panel
2 awg
1'
2 awg
1'
200 amp Fuse
8" from Charger
Charger/Inverter
2 AWG, 2'
Charger/Inverter
2 AWG, 2'