PRODUCT DESCRIPTION.

- ☐ *FURLIN' is a mainsail reefing and furling system.*
  The FURLIN' roller mechanism design is based on FURLEX foresail roller reefing and is dimensioned for the toughest conditions.

- ☐ *The unique design of the halyard.swivel bearing distributes the load over the whole ball-race to give smoother furling and the lowest possible friction.*

- ☐ *The entire reefing mechanism can be easily removed from the mast for service. Stainless steel inserts are used for all screws, so that dismantling is easy even after many years' usage in a corrosive environment.*

- ☐ *The mast extrusion has an additional luff groove for a storm trysail or spare main. A foresail with a rope luff could also be hoisted.*

- ☐ *This Instruction Manual has been compiled to give you information on the FURLIN' in-mast reefing system. Study it, and follow the instructions carefully, and we guarantee you many years of pleasurable use from your FURLIN'.*

- ☐ *Follow the relevant rigging instructions in our booklet "HINTS AND ADVICE" for tuning the rig.*

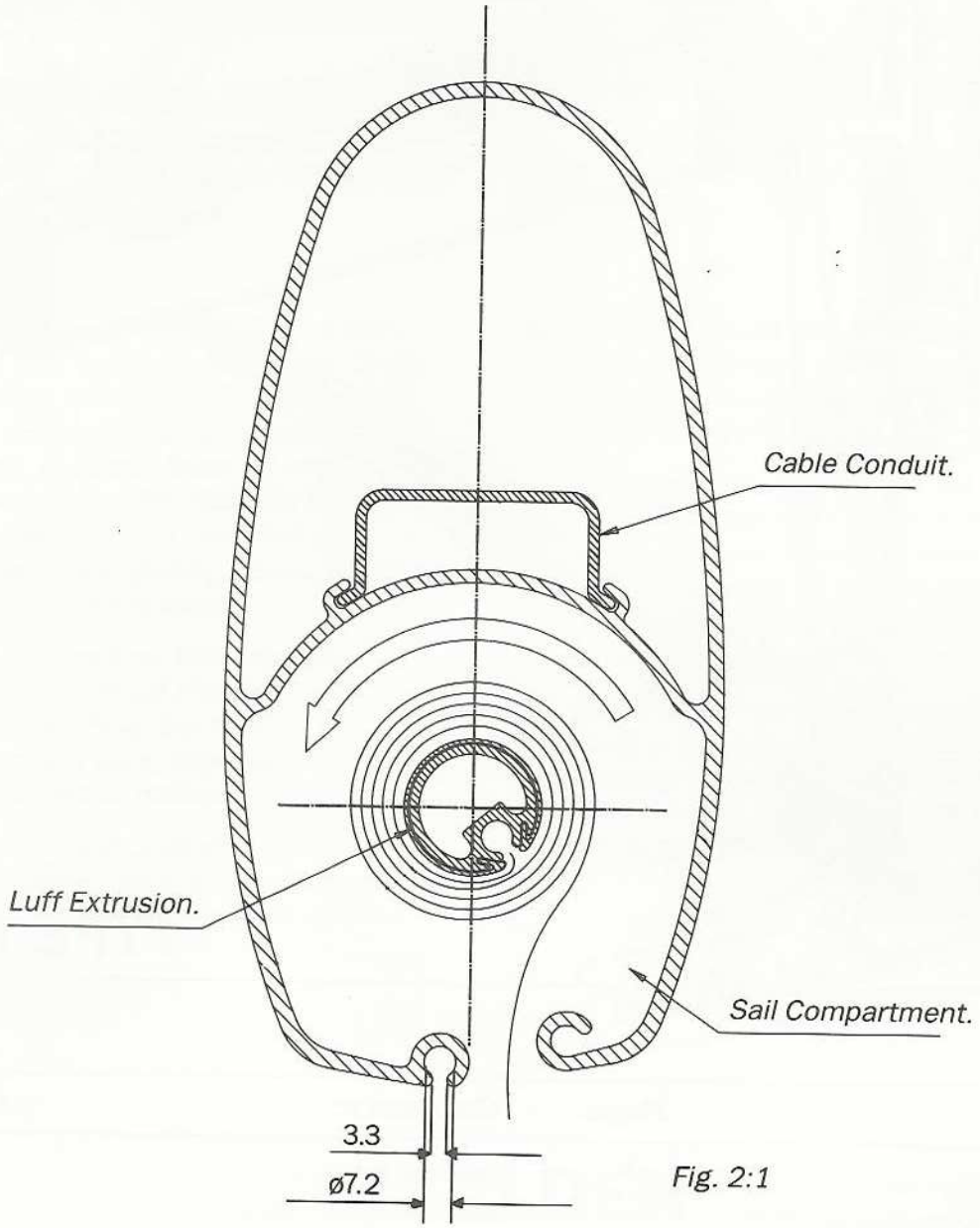

Fig. 2:1

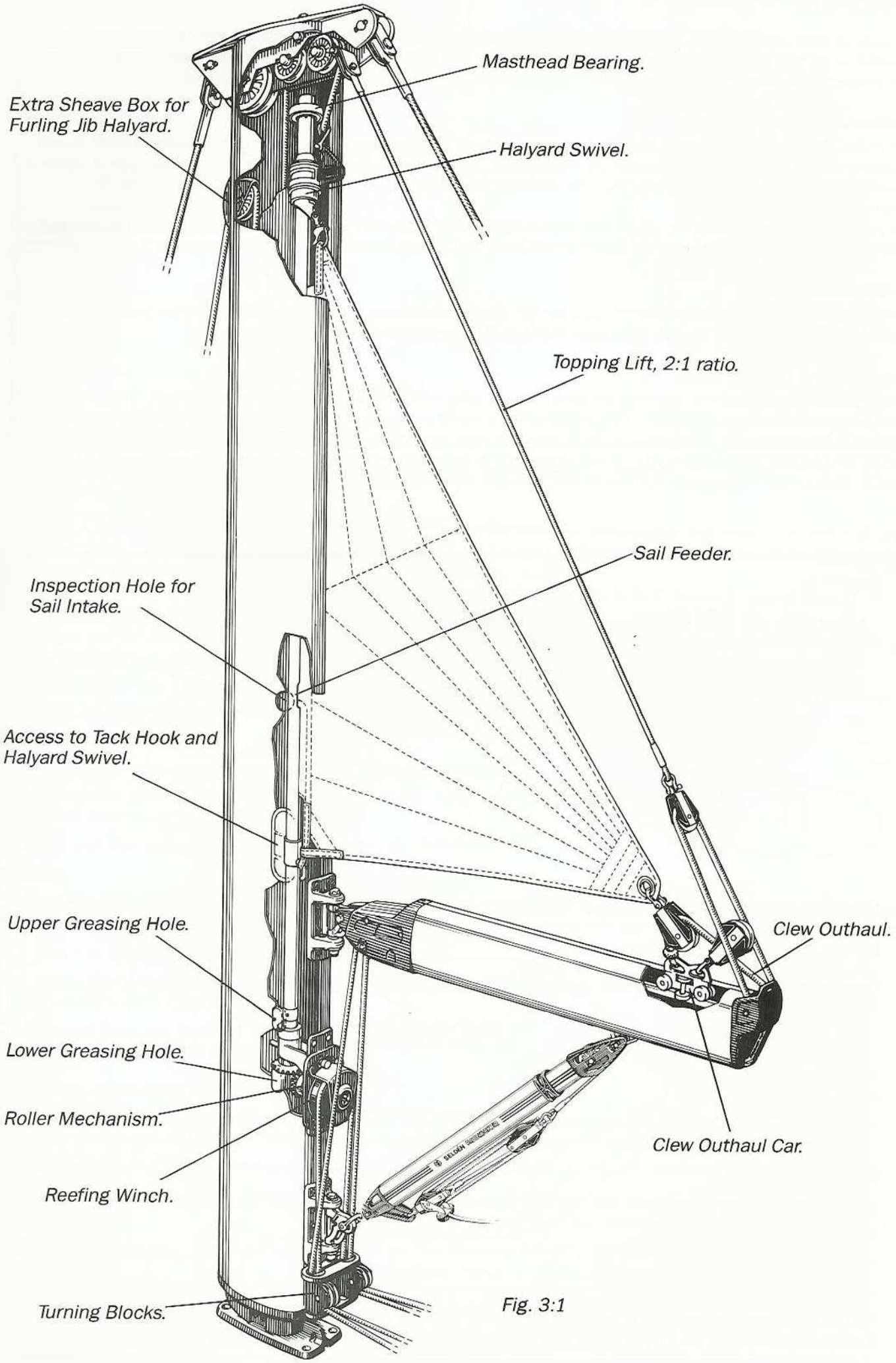
Masthead Bearing.
Extra Sheave Box for Furling Jib Halyard.
Halyard Swivel.
Topping Lift, 2:1 ratio.
Sail Feeder.
Inspection Hole for Sail Intake.
Access to Tack Hook and Halyard Swivel.
Upper Greasing Hole.
Clew Outhaul.
Lower Greasing Hole.
Roller Mechanism.
Clew Outhaul Car.
Reefing Winch.
Turning Blocks.

Fig. 3:1

OPERATION.

Reefing and unreefing is accomplished with a reefing line and an outhaul operated either from the cockpit or by working at the mast. In the latter case the outhaul is also taken to the boom or mast near the gooseneck. (See Fig. 5:1).

Endless line.

If FURLIN' is to be operated from the cockpit then a reefing line in the form of an endless loop in combination with a self-tailing winch is recommended. The endless loop must have surplus length to allow it to be easily removed from the winch. The tail-end of the loop must also be belayed on a cleat or Clam-cleat.

A rope-stopper can also be used, but it should be of a type that can be dismantled so that a pre-spliced loop can be fed into it. Otherwise the line will have to be first passed through the stopper before splicing.

Clew Outhaul line.

A self-tailing winch is also recommended for the clew outhaul line. A rope-stopper that permits controlled paying out, such as a Rutgersson RAM-JAM, is recommended for this purpose.

Topping lift & kicking strap.

We recommend that the topping lift and kicking strap also be handled from the cockpit. These lines are best belayed with rope-stoppers. The topping lift should be ended with a figure-of-eight stopper knot to prevent it inadvertantly running out. This stopper-knot should be placed where the rope exits from the boom, and in such a position that it will prevent the boom from dropping below its lowest necessary level. (NOTE. This is not necessary if a rod type kicking strap is used).

Figs. 4:1 och 4:2 show two suggested arrangements.

Layout 1.

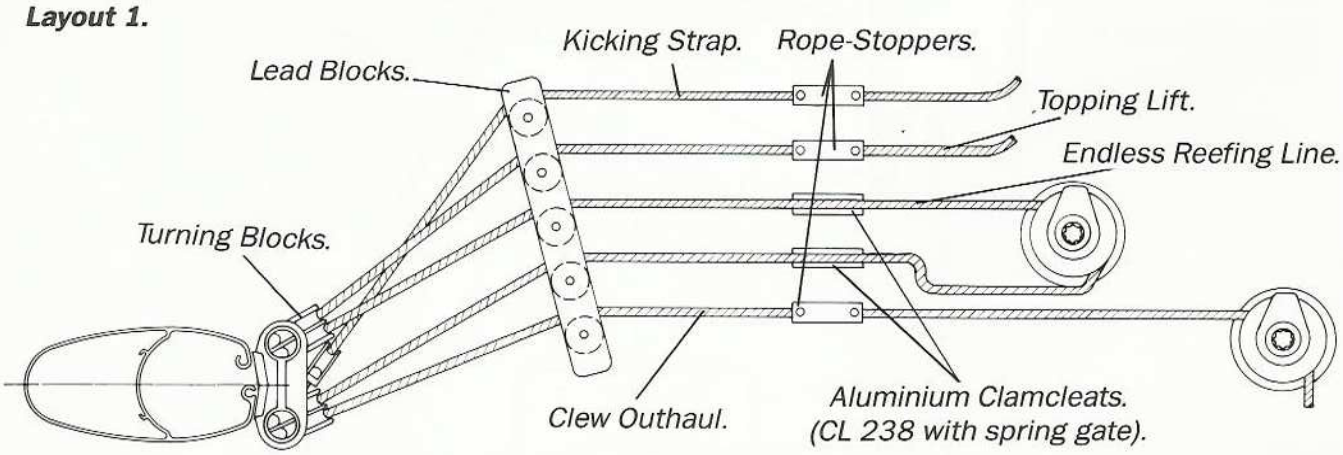

Workable even with one winch only, but is then more cumbersome — *Fig. 4:1*

Layout 2.

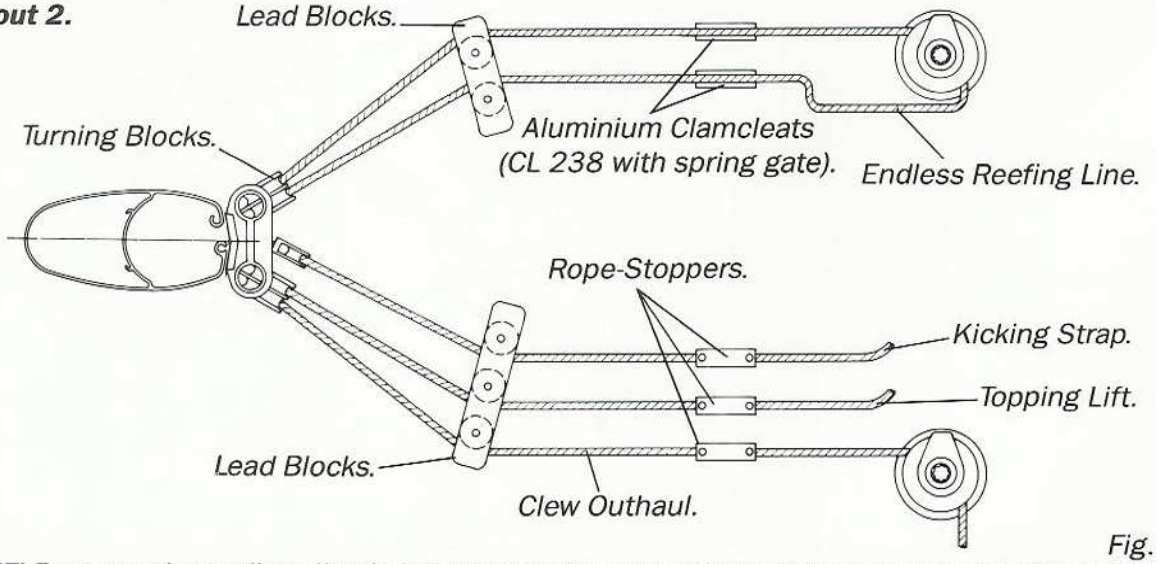

Fig. 4:2

NOTE! Because the endless line is led through the same turning block in both directions, excess friction can be built up through the line chafing against the kicking strap mast attachment piont.

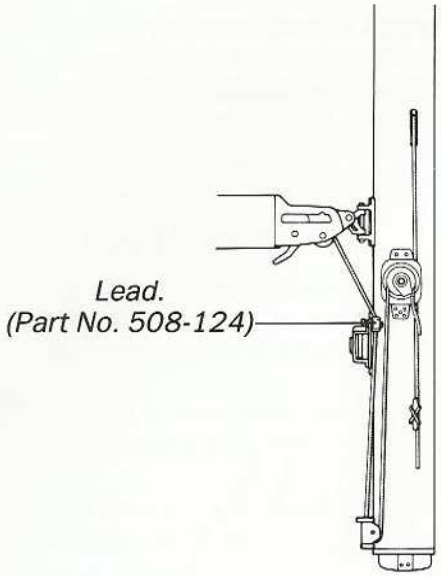

Fig. 5:1

Alternative Clew Outhaul Arrangement.

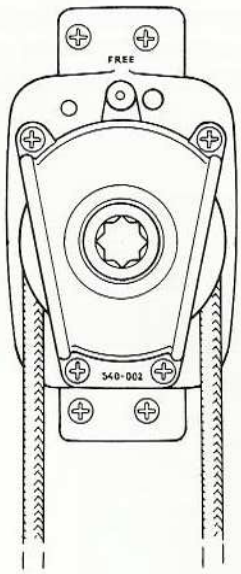

Fig. 5:2

- ☐ *When reefing from the cockpit the Reefing Winch must be set to "FREE". (See Fig. 5:2).*
- ☐ *Use 10 mm diameter double plaited line for the endless loop.*
- ☐ *The mast Turning Block has removable sheaves and a slit to allow the endless loop to be fitted even when pre-spliced.*
  N.B. THESE TURNING BLOCKS MUST BE USED FOR REEFING SYSTEM CONTROL LINES ONLY!
- ☐ *If deck lead blocks are used we recommend those with removable sheaves from SELDÉN MAST. (Part No. 538-809-01, three sheaves; or 538-810-01, 4 sheaves). A pre-spliced endless loop can be threaded through them.*
- ☐ *If fittings from other suppliers are used they should have similar features to the foregoing. Fittings with permanent sheaves will entail splicing in situ, with the awkwardness that entails.*

OPERATING HINTS.

Unfurling.

- ☐ *Free both sides of the endless loop from the winch and Clam-Cleat. It will then slide on the Reefing Winch.*
- ☐ *Pull out the sail with the outhaul line.*

Furling.

- ☐ *The leech should be kept fairly taught when reefing or furling. Adjust the topping lift to achieve this, and the sail will form a good tight roll around the luff extrusion.*
- ☐ *Use the winch to take up on the endless loop.*
- ☐ *Keep slight tension on the outhaul while doing this. This applies especially when the wind is abaft the beam or in light air.*
- ☐ *Always lock the Reefing Winch when leaving the boat.*

Reefing.

- ☐ *Carefully slacken off the outhaul line.*
- ☐ *Whilst continuing to ease off the outhaul, roll in the desired amount of sail. The leech should be kept fairly taught. Keep slight tension on the outhaul while doing this.*
- ☐ *When the desired amount of sail is rolled in, use the outhaul to stretch the foot of the sail.*

When operating from the cockpit: make both "sides" of the reefing line fast to prevent slip on the Reefing Winch. Finally, tension the outhaul.

When working at the mast: activate the lock on the Reefing Winch ("IN") before reefing the sail.

> *WARNING! Never leave the handle in the Reefing Winch!*
> *It will rotate very rapidly when the sail is unfurled.*

FITTING AND HOISTING THE SAIL.

1 Check that the Tack and Head of the sail are made as illustrated on page 7. An incorrectly made tack can cause wrinkles and make smooth furling difficult.

2 Remove the Cover.

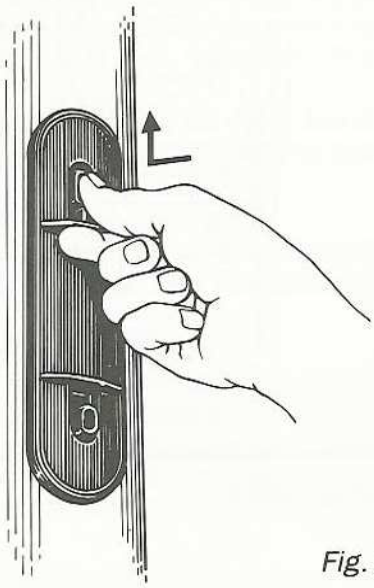

Fig. 6:1

Depress one button and push.

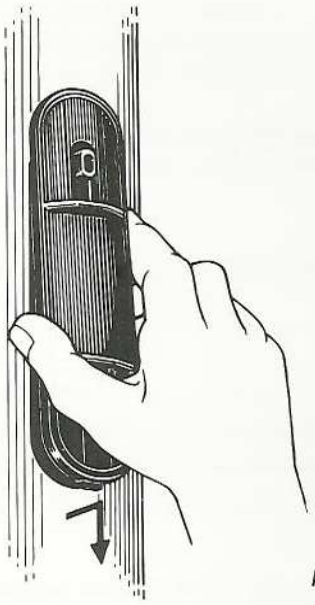

Fig. 6:2

Lift the oppsite end and remove.

3 Join the head to the halyard swivel.

4 Join the outhaul block to the clew of the sail.

5 Hoist the sail until there is about 700 mm. (2'3'') between the sail foot and the upper edge of the sail feed. Keep a check at the sail feed that the luff is being correctly fed into the luff extrusion.

6 Feed the bottom part of the luff into the extrusion below the sail feed. Connect the tack to its hook.

7 Stretch the halyard until horizontal folds disappear and lock it in its halyard stopper. Halyard tension is subsequently adjusted when sailing to get correct draft.

8 Roll the sail into the mast until only the clew is exposed. The mast extrusion is asymmetric, which facilitates rolling in the sail in one direction. The sail should therefore always be rolled on to the starboard side of the luff extrusion. (See Fig. 6:3). This is done by turning the Reefing Winch clockwise.

NOTE. TURN THE REEFING WINCH CLOCKWISE.
THE SAIL WILL THEN BE REEFED CORRECTLY.

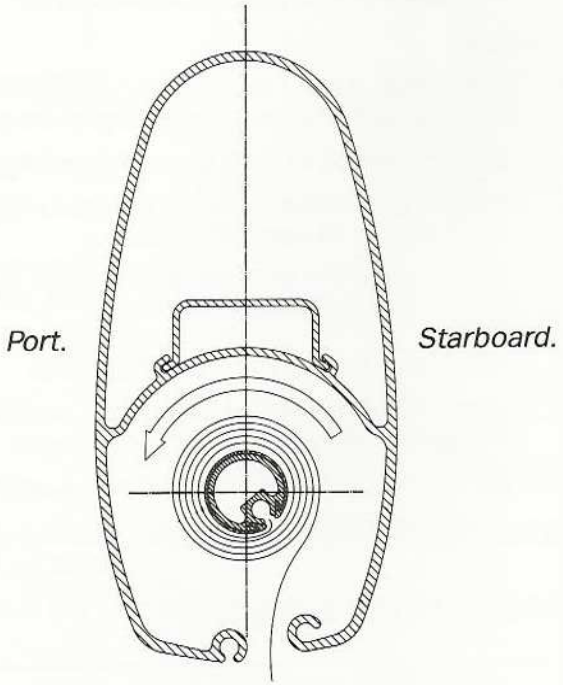

Fig. 6:3

BEFORE SAILING

1 Check that the sail is correctly furled on the luff extrusion: i.e. to its starboard side. (See Fig. 6:3).

2 Whilst still on the mooring furl and unfurl the sail a couple of times to ensure that the system is working as it should, and also to ensure that the sail is to correct size.

THE SAIL.

The luff should be easy to fold around the luff extrusion for reduced rolling resistance when starting to roll in the sail. Do not use too heavy a cloth in the luff area.

To improve sail shape when reefed and to reduce draft, "Luff Foam" may be used along the luff. The foam should not be placed closer than 50 mm (2") from the front edge of the luff as it would then increase initial reefing resistance.

SAIL DIMENSIONS.

- ☐ *We recommend maximum 5 mm (13/64") luff tape. (Maximum 4 mm hard line). Dimensions for the luff groove are shown in Fig. 7:1.*
- ☐ *Head and tack tapes should be of soft quality which can fold easily. Do not use metal eyelets on them.*
- ☐ *The clew cringle must not be thicker than 14 mm (35/64") in order to fit the outhaul block.*

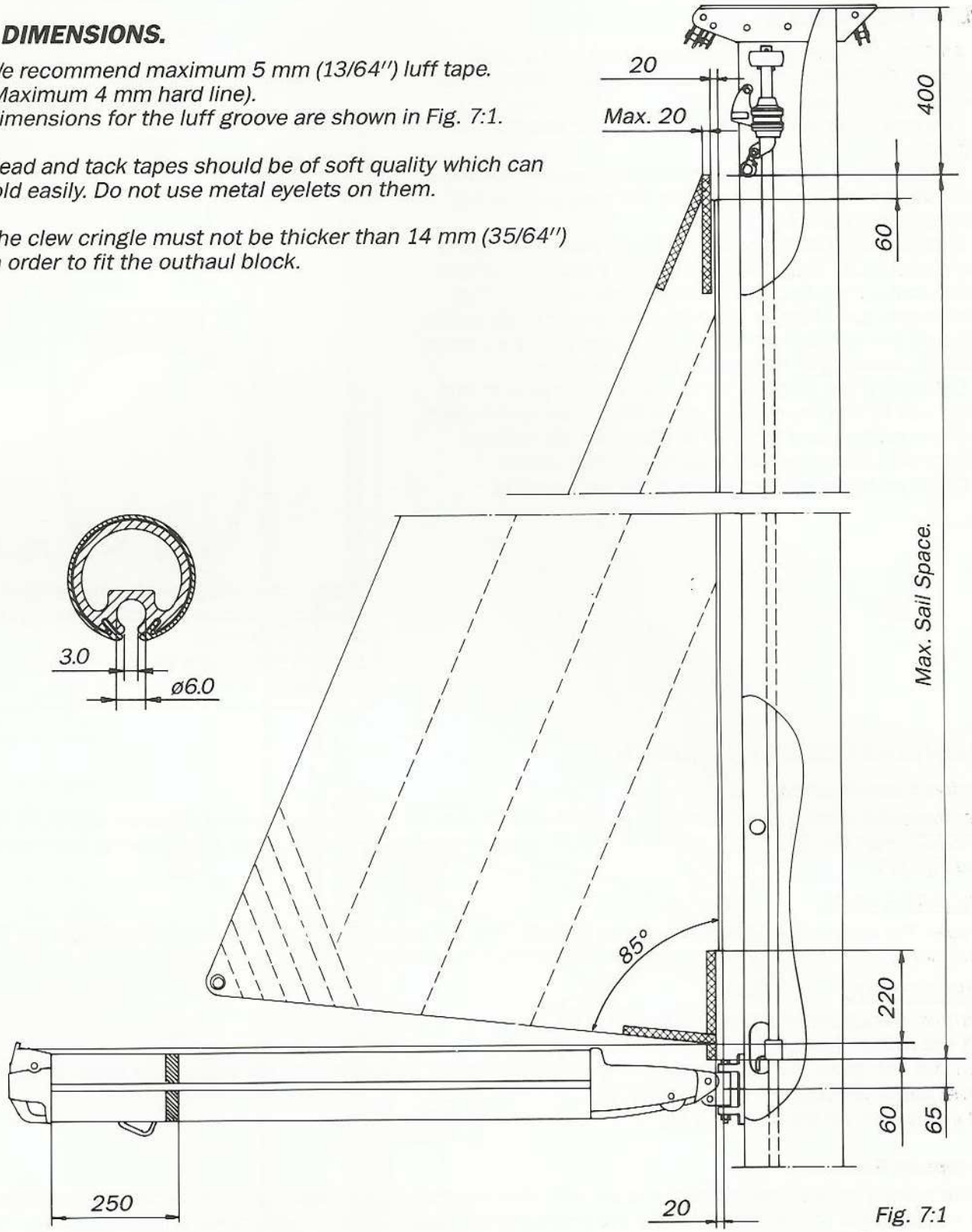

Fig. 7:1

SPARE MAINSAIL.

The integrated sail groove on the after face of the mast can be used for hoisting a reserve sail. A foresail with luff tape and intended for use on an extrusion such as on FURLEX can be used with advantage. See Fig. 2:1 for dimensions.

ANTI-VIBRATION STRIP.

Vibration can occur with any mast of normal design. With winds of 4–12 knots coming from abeam the mast oscillates longitudinally at a rate of 3–6 cycles per second. As an optional item an "anti-vibration strip" is available for hoisting in the integral sail groove to help prevent this oscillation from starting. It will also reduce wind noise.

For further information, contact Seldén Mast AB.

RUNNING CABLES.

All FURLIN' mast extrusions are fitted with a cable conduit. On keel-stepped masts this goes uninterrupted through to the foot.

The mast is provided with a messenger line from the factory.

Thread a new messenger line at the same time as you run through any new cables. This will ease any future, further, cable running.

If an existing cable should prevent a new cable being run it should be extracted, but attach a new messenger to the cable first, to take its place in the conduit. That messenger can then be used to draw two or more cables through the conduit — but do not forget to draw a replacement messenger through at the same time.

Cables are fed into the conduit through a hole in the mast wall by the head box. Cables should be over-length to allow subsequent removal of the head box without electrically disconnecting masthead installations.

Cable exits are located in the mast heel casting.

Extrusion No.
190/94
213/104
235/116

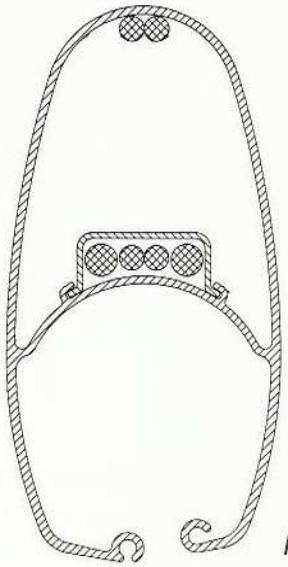

Fig. 8:1

When retro-fitting cables in the front of the mast they should be drawn through the halyard chamber.
Stretch them tight to prevent them slamming.

MAINTENANCE OF THE FURLIN'.

Periodic maintenance.

Maintenance should be undertaken at least once a year. All bearings should be greased with FURLIN' GREASE (Part No. 312-501), a tube of which is delivered with the mast. Read the following instructions and Fig. 9:1.

HALYARD SWIVEL.

Grease the bearings by pressing grease directly into the recesses ① and ② by the rotating ring. This is best done when the swivel is opposite the sail feed inspection hole ⑦.

FURLIN' GEAR.

Remove the upper oval plastic plug ④.
Lift the rubber boot, and grease the upper bearing ③ on the roller mechanism.
Remove the lower oval plastic plug level with the Reefing Winch and on the side of the mast. Grease the bevel gears ⑤, and the ball bearing ⑥.
All grease points are shown in Fig. 9:1.

Complete Service.

If the reefing system should begin to be stiff after several years' usage it can be necessary to dismantle its components for servicing. Clean the gears and ball-bearings from old grease and re-lubricate.

The FURLIN' mast is designed for easy servicing even after a long period of time. The holding bolts for the Reefing Unit are screwed into stainless steel blind nuts and are not subject to corrosion.

Dismantling is described on page 10.

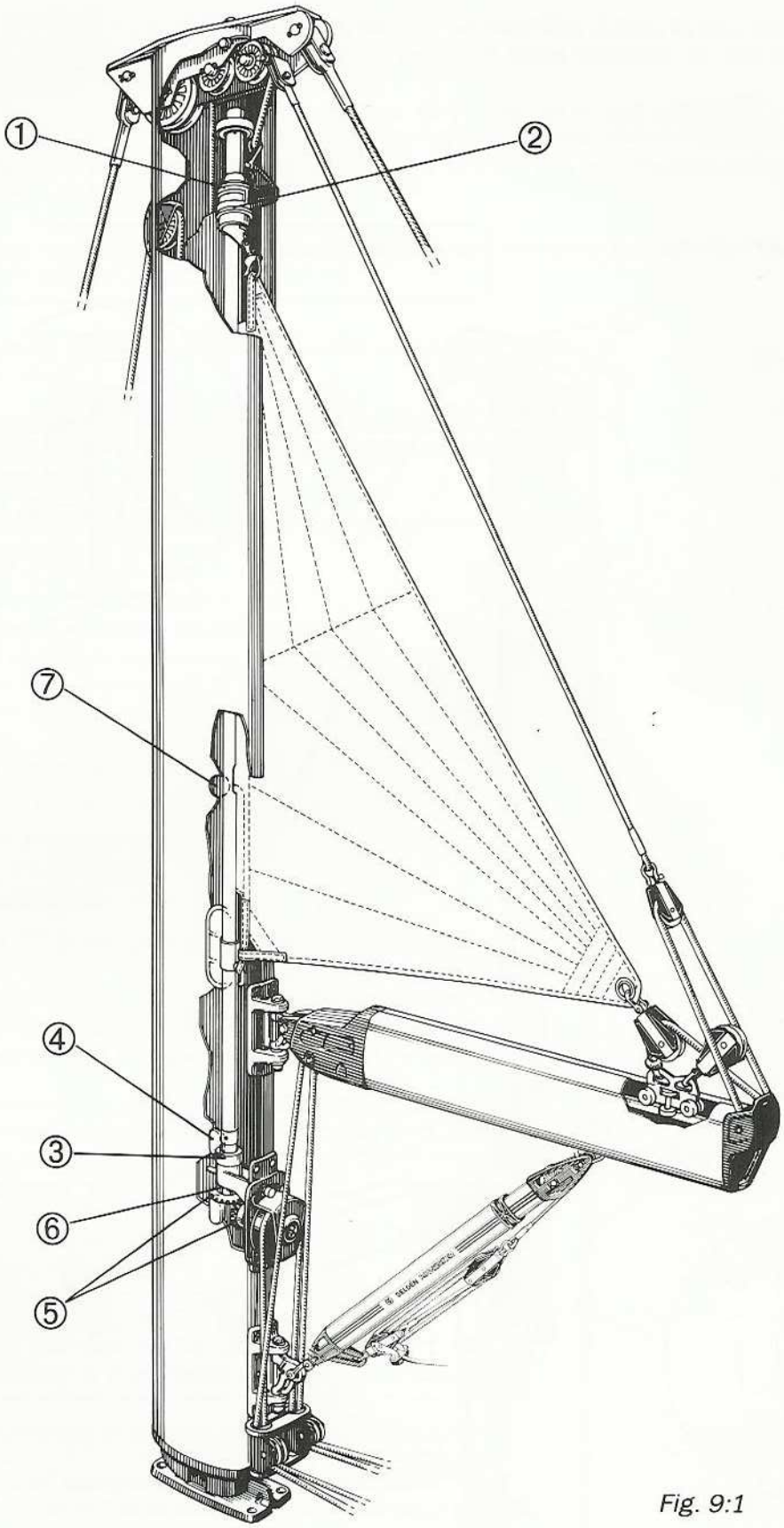

Fig. 9:1

REMOVAL OF THE FURLIN' GEAR FROM THE MAST.

1 *Lay the mast horizontally.*

2 *Remove the upper plug ①. Free the extrusion from the Reefing Unit through the greasing aperture by removing the lower split-pin and clevis pin ② .*

3 *Unbolt the Reefing Unit (4 bolts), and remove it from the mast.*
(The Reefing Unit can be removed while the mast is rigged).

4 *Remove the nuts ③ on the top of the head-box and lift off the head-box.*

5 *Pull the luff extrusion a short way out of the mast and remove the split-pins holding the plastic bushing in place.*

6 *The halyard swivel can then be removed from the extrusion.*

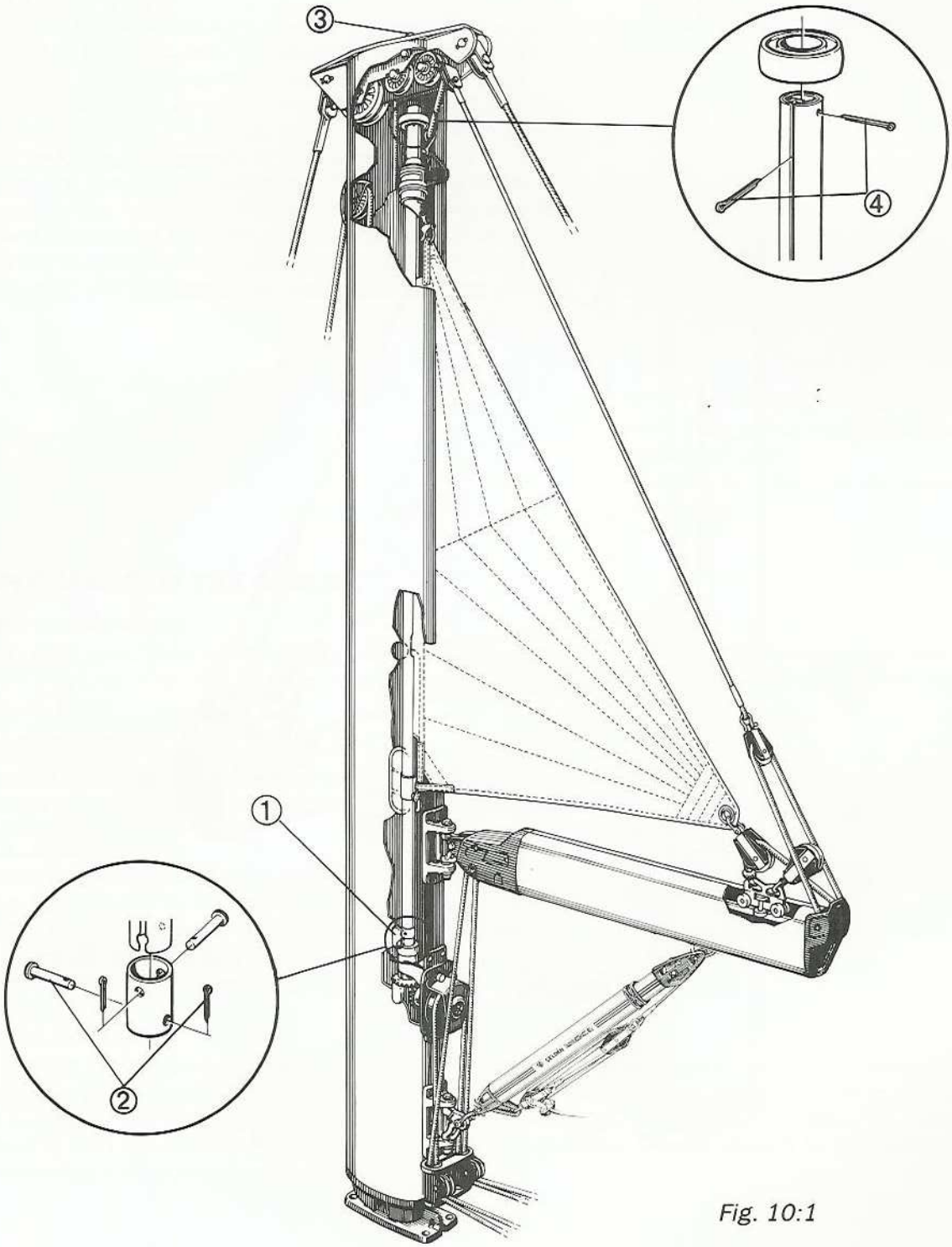

Fig. 10:1

DISMANTLING UNITS WITH BALL BEARINGS.

All dismantling should be done on a clean unbroken surface. The various ball bearing units contain many small parts that fall apart when dismantling. Lay the dismantled parts out in an orderly manner.

Dismantling the FURLIN' gear.

Tools required:
- *Hammer*
- *Punch, 5 mm. (3/16").*
- *Phillips Screwdriver.*

1. *Drive the spring cotter out from the upper bevel gear ①. Use hammer and punch.*
2. *Draw the shaft ② up and out from the housing.*

> *At the same time take care of the balls and ball-races which will fall apart.*

3. *Drive the spring cotter ③ out of the lower bevel gear. Draw the gear off the shaft.*
4. *Undo the four holding bolts that hold the cover ④ over the Reefing Winch. Take off the cover. Remove loose components from the front of the winch.*
5. *Clean the ball bearings, races, gears and winch ratchets in a white-spirit bath.*
6. *Re-assemble all components in the reverse order. The winch ratchets must be greased before re-assembly. A layer of grease in the cupped half of a ball-race will hold the balls in place during re-assembly.*
   Grease the bevel gear teeth.

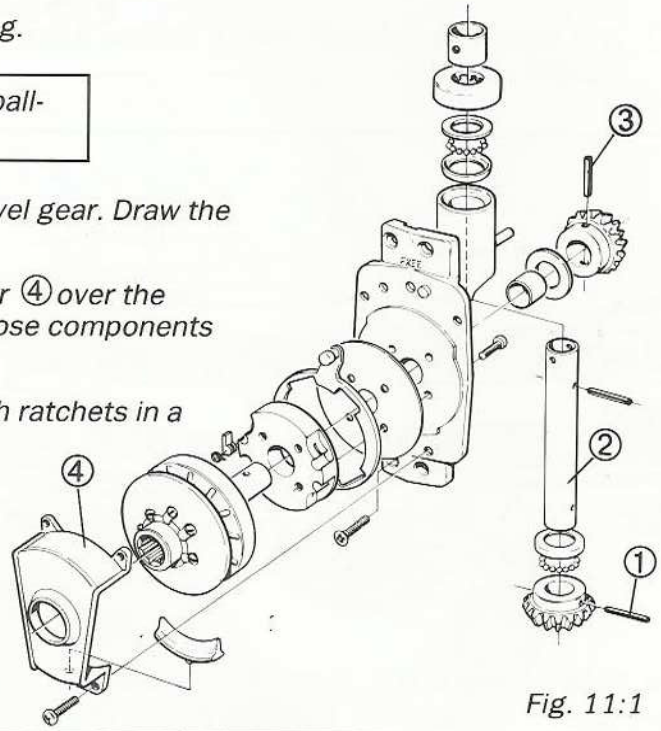

Fig. 11:1

Dismantling the Halyard Swivel.

Tools required:
- *2 small screwdrivers.*

1. Component ① *is secured by a bayonet fastening and two pairs of "snaps" ② that prevent it from turning. Two of these snap-locks (diagonally opposite each other) are pressed simultaneously outwards with the two small screwdrivers so that the component can be turned.*
2. *Turn component ① 90°. Draw it over the bayonet fastening until it stops (about 10 mm. (3/8")), and turn the component in the reverse direction 90°. Component ① can now be lifted off.*
3. *Lift off part ③ together with one ball race. Then lift away the other ball race.*

> *NOTE.*
> *There is a risk that the ball bearings fall apart. Ball bearings lying in their races must be taken care of.*

4. *Clean the bearings and races in a bath of white spirit.*
5. *Re-assemble all components in the reverse order.*
   A layer of grease in the cupped half of a ball-race will hold the balls in place during re-assembly.
6. *Check that the snap-locks ② holding component ① in place have gone completely home.*

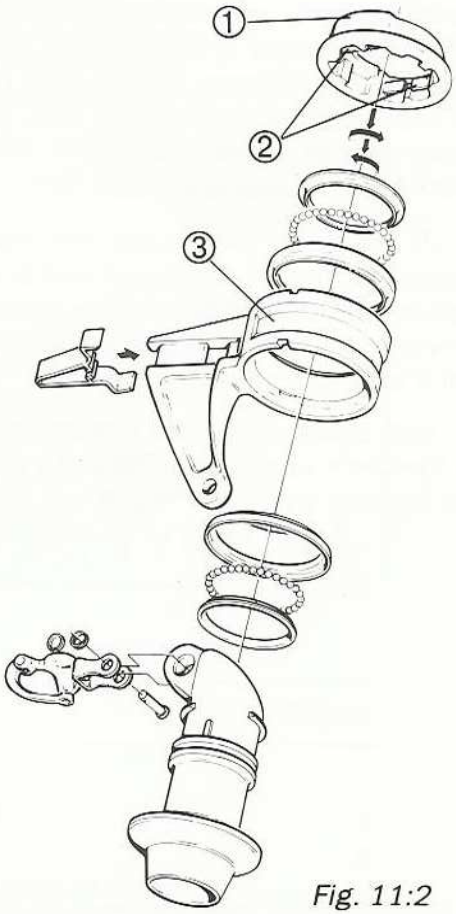

Fig. 11:2

IMPORTANTS POINTS TO REMEMBER BEFORE SETTING SAIL.

- ☐ *The sail must always be rolled to the starboard side of the extrusion. Turn the Reefing Winch clockwise and it will be correct.*
- ☐ *The leech should always be kept fairly taught when reefing of furling. Use the topping lift.*
- ☐ *Lock the Reefing Winch at the mast when reefing in heavy winds.*
- ☐ *Lock the Reefing Winch when you leave the boat.*
- ☐ *The topping lift should have a stopper-knot to prevent the boom from dropping into the cockpit.*

The Seldén Group is one of the world's leading manufacturers of spar and rigging systems. Our comprehensive range caters for dinghies, performance dayboats and yachts up to 30 tonnes. The group consists of Seldén Mast AB and YRAB, both in Sweden, Seldén Mast Ltd in the UK and Seldén Mast Inc in the USA. Our well known product names are Seldén, Furlex, Furlin', Furlex Main, Proctor and Hasselfors.

At Seldén we are sailors. Our extensive sailing experience, combined with practical engineering knowledge, is at the heart of our business. It guarantees care, attention to detail and a total commitment to quality.

With development and production facilities on Sweden's west coast, England's south coast and the east coast of the USA, we have unique opportunities to test and develop our products under tough, practical, sea-going conditions. All manufacturing is carried out in accordance with strict quality control routines.

Our quality philosophy does not stop at the production line, but is extended to our authorized distribution and service network through a complete programme of training courses, instruction manuals and films. Everything, in fact, to ensure customer satisfaction.

Based on our global success with Furlex we have built a network of over 700 authorized dealers covering the world's marine markets. So wherever you sail, you can be sure of fast access to our service, spare parts and know-how.

Made in Sweden

SELDÉN

Seldén Mast AB, Sweden, Tel +46 (0)31 69 69 00, Fax +46 (0)31 29 71 37, e-mail info@seldenmast.com
Seldén Mast Limited, UK, Tel +44 (0)1489 48 40 00, Fax +44 (0)1489 48 74 87, e-mail selden.ltd@dial.pipex.com
Seldén Mast Inc. USA, Tel +1 843-760-6278, Fax +1 843-760-1220, e-mail SeldenUS@quik.com
Internet www.seldenmast.com

595-059-E / 98-11-04 Boab Trycheri AB. Printed in Sweden

595-110-E
98-10-12

FURLIN'
MAIN FURLING & REEFING SYSTEM
SELDÉN

Spare Parts List - Furling System

Type: RA MK III
RB MK III
RC MK III

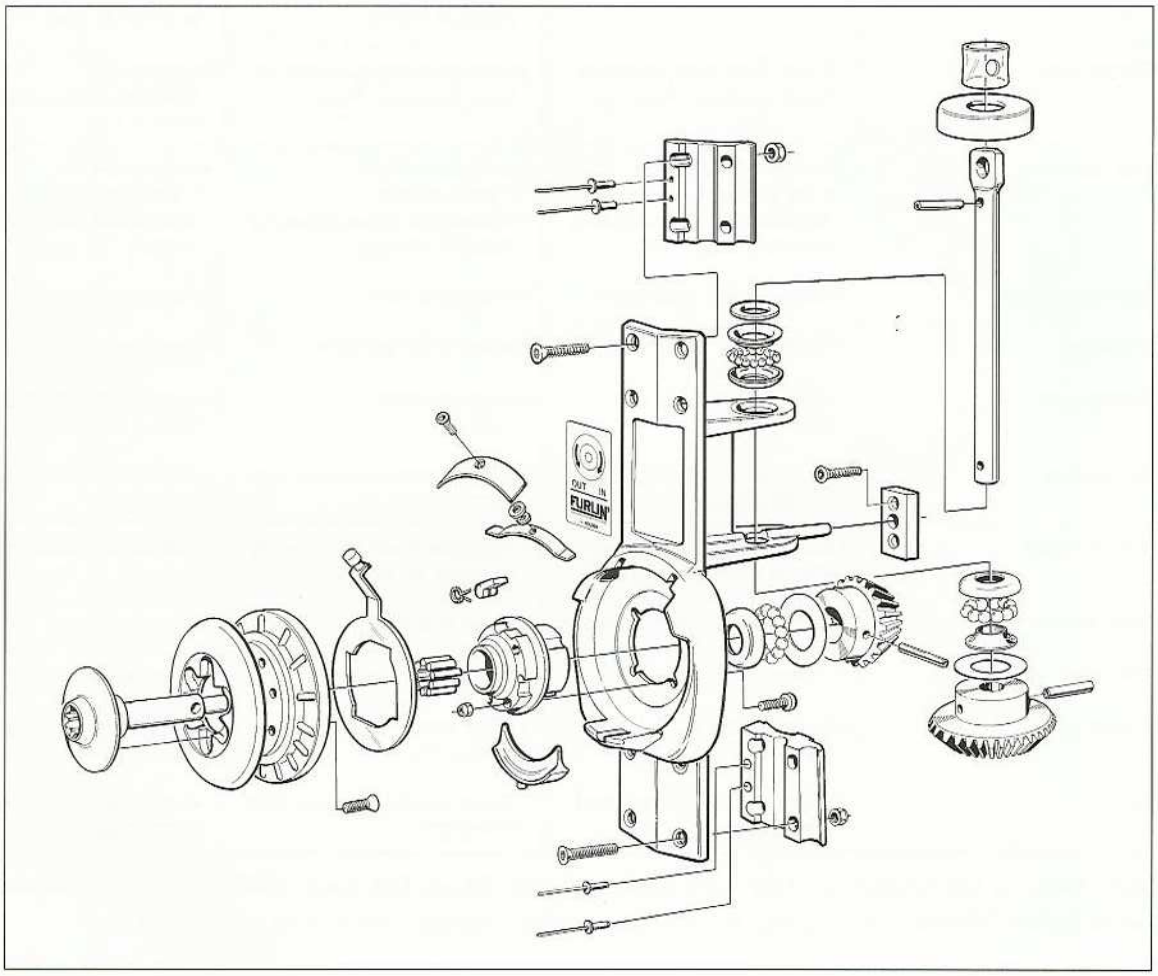

SELDÉN

General information

Identification of Furlin' model

As a result of continued product development, some parts have been replaced and improved over the years. To help identify which version (Mk No.) you have, the physical features are listed in the table below.

If you recived this spare parts lists with a new mast, then you have the Mk III-version. Please disregard other models.

Spare parts lists can be obtained from Seldén.

In contacts with Seldén the production number, engraved in the section close to the heal, can also be used for identifcation.

	Parts	Mk I	Mk II	Mk III
RA	• Luff extrusion	• Not tensioned	• Tensioned. Adjustment screw locked by round Al.Al tube	• Tensioned. Adjustment screw locked by round Al.Al tube
	• Furling gear	• Front cover hides centre of black linedriver. Ratio 1:1	• Front cover hides centre of black linedriver. Ratio 1:1	• Black/silver linedriver fully exposed Ratio 1:1,75
RB	• Luff extrusion	• Luff groove Ø10 2 flat surfaces Adjustment screw locked by square locking tube	• Luff groove Ø10 2 flat surfaces Adjustment screw locked by round Al. Al. tube.	• Luff groove Ø8. 1 flat surface Adjustment screw locked by round Al. Al. tube.
	• Tack attachment	• Swinging tack attachment	• Fixed tack hook.	• Fixed tack hook.
	• Sail entry	• Slotted tube	• Milled in luff extrusion	• Open groove. No milling
	• Furling gear	• Silver linedriver. Ratio 1:1,5	• Silver linedriver. Ratio 1:1,5	• Black/Silver linedriver. Ratio 1:2
	• Bombacket	• Boom bracket incorporated in furling gear.	• Boom bracket separate from furling gear.	• Boom bracket separate from furling gear.
RC	• Luff extrusion	• Adjustment screw locked by square locking tube (St.st)	• Adjustment screw locked by round Al. Al. tube.	• Adjustment screw locked by round Al. Al. tube.
	• Tack attachment	• Swinging tack attachment	• Fixed tack hook.	• Fixed tack hook.
	• Sail entry	• Slotted tube	• Milled in luff extrusion	• Milled in luffextrusion
	• Furling gear	• Silver linedriver. Ratio 1:1,5	• Silver linedriver. Ratio 1:1,5	• Black/Silver linedriver. Ratio 1:2
	• Bombacket	• Boom bracket incorporated in furling gear.	• Boom bracket separate from furling gear.	• Boom bracket separate from furling gear.

Note: Early masts of the smaller RA size were made by Kemp Masts Ltd, using different driving methods. Theses were called "Reefin". For spares & assistance, contact Seldén Masts Ltd in England.

If the halyard swivel or furling gear are dismanteled, they can be difficult to re-assembly as the balls are loose in the bearing races. Use grease as temporary adhesive during assembly. For service assistance, contact your Seldén dealer.

You will find Seldén- & Furlex dealers list in the Furlex spare parts list or at Internet (see last page)

Seldén Mast AB reserves the right to alter the design or specification without prior warning; to allow unrestricted future product development.

Contents

	Page
General information	2
Halyard swivel	4
Furling gear	6
Top swivel	10
Tack assembly	12
Sail feeder assembly	16
Luff extrusion	16
Swinging lead	18
Additional items	20

General information

Identification of Furlin' model

As a result of continued product development, some parts have been replaced and improved over the years. To help identify which version (Mk No.) you have, the physical features are listed in the table below.

If you recived this spare parts lists with a new mast, then you have the Mk III-version. Please disregard other models.

Spare parts lists can be obtained from Seldén.

In contacts with Seldén the production number, engraved in the section close to the heal, can also be used for identifcation.

	Parts	Mk I	Mk II	Mk III
RA	• Luff extrusion	• Not tensioned	• Tensioned. Adjustment screw locked by round Al.Al tube	• Tensioned. Adjustment screw locked by round Al.Al tube
	• Furling gear	• Front cover hides centre of black linedriver. Ratio 1:1	• Front cover hides centre of black linedriver. Ratio 1:1	• Black/silver linedriver fully exposed Ratio 1:1,75
RB	• Luff extrusion	• Luff groove Ø10 2 flat surfaces Adjustment screw locked by square locking tube	• Luff groove Ø10 2 flat surfaces Adjustment screw locked by round Al. Al. tube.	• Luff groove Ø8. 1 flat surface Adjustment screw locked by round Al. Al. tube.
	• Tack attachment	• Swinging tack attachment	• Fixed tack hook.	• Fixed tack hook.
	• Sail entry	• Slotted tube	• Milled in luff extrusion	• Open groove. No milling
	• Furling gear	• Silver linedriver. Ratio 1:1,5	• Silver linedriver. Ratio 1:1,5	• Black/Silver linedriver. Ratio 1:2
	• Bombacket	• Boom bracket incorporated in furling gear.	• Boom bracket separate from furling gear.	• Boom bracket separate from furling gear.
RC	• Luff extrusion	• Adjustment screw locked by square locking tube (St.st)	• Adjustment screw locked by round Al. Al. tube.	• Adjustment screw locked by round Al. Al. tube.
	• Tack attachment	• Swinging tack attachment	• Fixed tack hook.	• Fixed tack hook.
	• Sail entry	• Slotted tube	• Milled in luff extrusion	• Milled in luffextrusion
	• Furling gear	• Silver linedriver. Ratio 1:1,5	• Silver linedriver. Ratio 1:1,5	• Black/Silver linedriver. Ratio 1:2
	• Bombacket	• Boom bracket incorporated in furling gear.	• Boom bracket separate from furling gear.	• Boom bracket separate from furling gear.

Note: Early masts of the smaller RA size were made by Kemp Masts Ltd, using different driving methods. Theses were called "Reefin". For spares & assistance, contact Seldén Masts Ltd in England.

If the halyard swivel or furling gear are dismanteled, they can be difficult to re-assembly as the balls are loose in the bearing races. Use grease as temporary adhesive during assembly. For service assistance, contact your Seldén dealer.

You will find Seldén- & Furlex dealers list in the Furlex spare parts list or at Internet (see last page)

Seldén Mast AB reserves the right to alter the design or specification without prior warning; to allow unrestricted future product development.

Halyard swivel

Description A

		Type RA Mk III Mast extrusion 190/94 213/104 235/116			Type RB Mk III Mast extrusion 232/126 260/150			Type RC Mk III Mast extrusion 290/150		
Item	Description	Dimension	Qty	Part No	Dimension	Qty	Part No	Dimension	Qty	Part No
		Assembly number →		540-017-01	Assembly number →		539-051-02	Assembly number →		540-201-02
A1	Hub	Ø68x140	1	540-051	Ø84x115	1	539-051	Ø102x140	1	539-201
A2	Ball bearing ring-inner	Ø57x7	2	539-309	Ø74x7	2	539-059	Ø84x8	2	539-220
A3	Ball	Ø6	54	539-034	Ø6	68	539-034	Ø8	60	539-128
A4	Ball bearing ring-outer	Ø62x11,5	2	539-310	Ø76x15	2	539-058	Ø90x11	2	539-219
A5	Eye ring/ track guide	Ø63x104	1	540-018	Ø84x95	1	540-107	Ø120x136	1	540-209
A6	Sliding insert	11x65	1	540-019	20x65	1	540-108	31x65	1	540-223
A7	Flange collar	Ø70x20	1	539-302	Ø84x33	1	539-052	Ø102x45	1	540-219
A8	Twisted shackle	M6-12x46	1	307-023	M6-12x46	1	307-039	-	-	-
A9	Screw	-	-	-	MFT6x16	2	162-025	MFT 6x16	2	162-025
A10	Locking nut	-	-	-	M6	2	158-005	M6	2	158-005
A11	Sliding sleeve	-	-	-	Ø50/34-180	1	540-109	Ø60/42-213	1	540-222
A12	Intermediate ring	-	-	-	-	-	-	Ø88/67-9	2	539-218
A13	Supporting strip	-	-	-	-	-	-	97x24x4	1	540-220
A14	Screw	-	-	-	-	-	-	MRT 6x12	2	155-613
A15	Screw	-	-	-	-	-	-	MFT 6x30	1	162-044
A16	Bushing	-	-	-	-	-	-	Ø12/6,5-21	1	306-535
A17	Screw	-	-	-	-	-	-	M12/Ø10x 30	1	155-030
A18	Collar	-	-	-	-	-	-	Ø58/50-52	1	540-221
A19	Screw	-	-	-	-	-	-	MRX 6x8	2	155-624

Type RA MK III

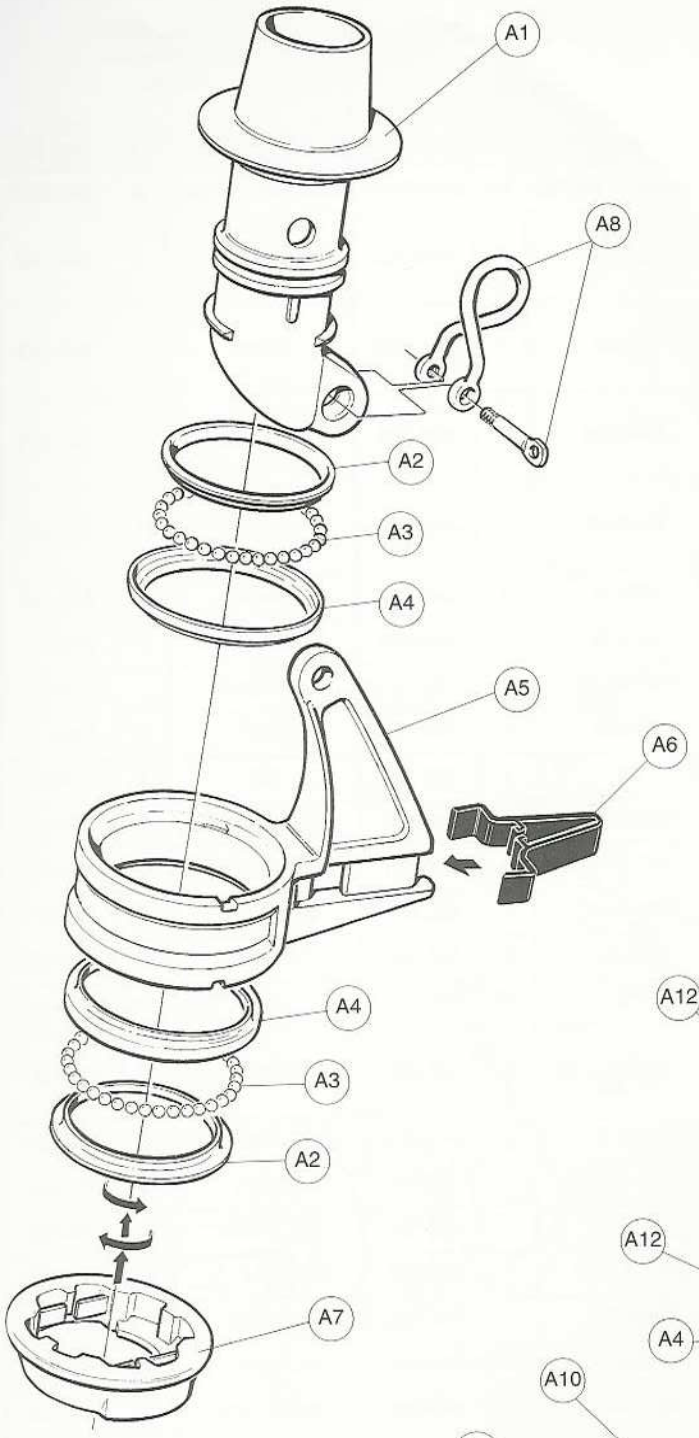

Type RB/RC MK III

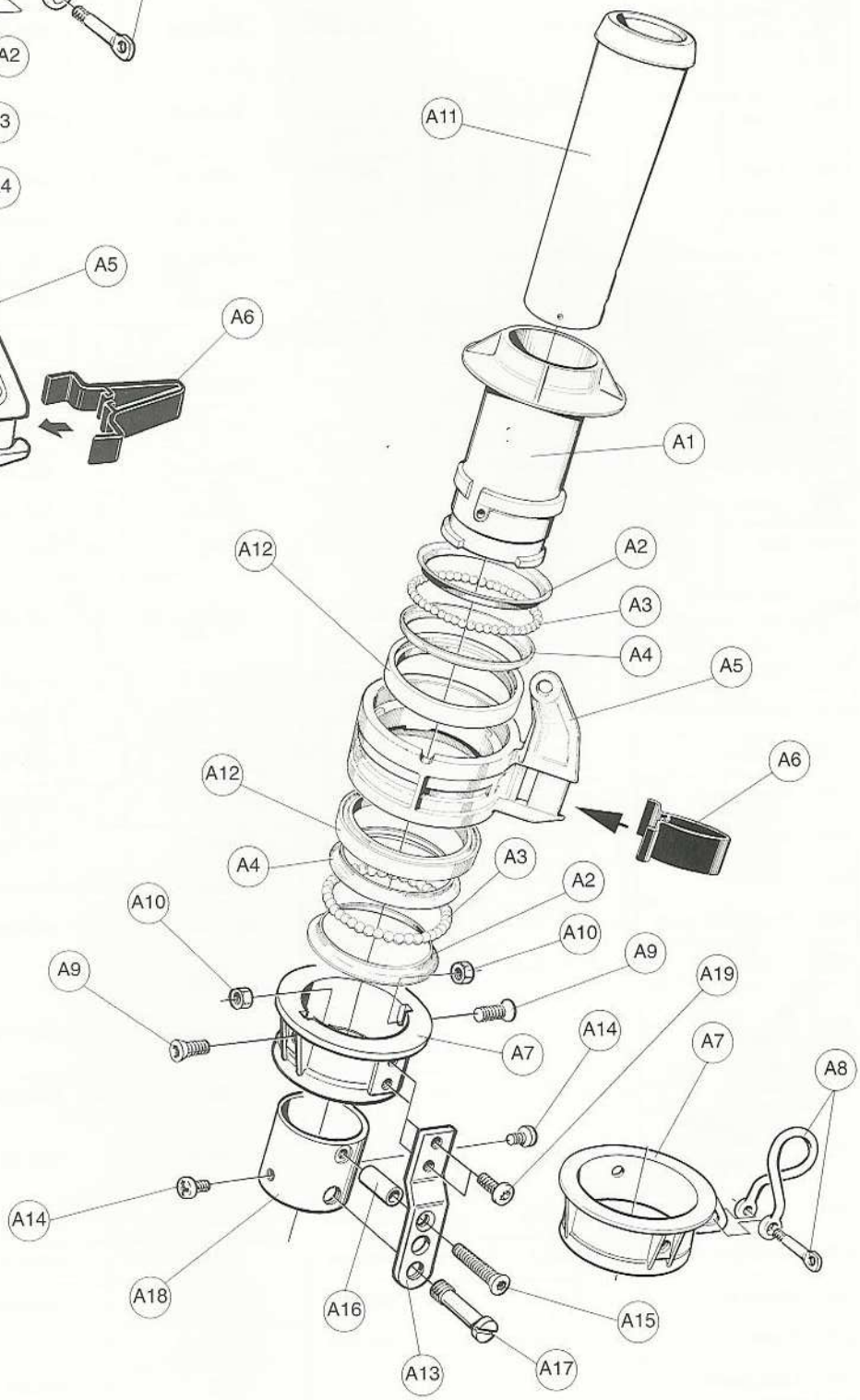

Furling gear

Description B

		Type RA Mk III Mast extrusion 190/94 213/104 235/116			Type RB Mk III Mast extrusion 232/126 260/150			Type RC Mk III Mast extrusion 290/150		
Item	Description	Dimension	Qty	Part No	Dimension	Qty	Part No	Dimension	Qty	Part No
		Assembly number →		540-047-01	Assembly number →		540-142-01	Assembly number →		540-142-01
B1	Furling gear bracket	210x110	1	540-047	424x132	1	540-142	424x132	1	540-142
B2	Label - Furling direction	-	-	-	73x43	1	591-268	73x43	1	591-268
B3	Line driver half - outer	Ø100/36-14	1	540-048	Ø120/36	1	540-153	Ø120/36	1	540-153
B4	Line driver half - inner	Ø100/35-25	1	540-049	Ø120/36	1	540-152	Ø120/36	1	540-152
B5	Pawl	Ø8x16	4	540-007	Ø8x16	4	540-007	Ø8x16	4	540-007
B6	Spring	Ø7/0,5	4	540-008	Ø7/0,5	4	540-008	Ø7/0,5	4	540-008
B7	Hub assembly	Ø80/22-48	1	540-143-01	Ø80/22-48	1	540-143-01	Ø80/22-48	1	540-143-01
B8	Needle roller	Ø5x25	15	166-175	Ø5x25	15	166-175	Ø5x25	15	166-175
B9	Locking nut	M6	4	158-005	M6	4	158-005	M6	4	158-005
B10	Shaft	Ø20/75-120	1	540-053	Ø20/75-120	1	540-053	Ø20/75-120	1	540-053
B11	Screw	MFT 6x20	6	162-031	MFT 6x20	6	162-031	MFT 6x20	6	162-031
B12	Bevel gear	Ø144/20-26	1	320-009	Ø84/20-40	1	320-011	Ø84/20-40	1	320-011
B13	Spring pin	Ø8x45	1	166-503	Ø8x45	2	166-503	Ø8x45	2	166-503
B14	Ball	Ø6	13	539-034	Ø6	13	539-034	Ø6	13	539-034
B15	Ball bearing ring - outer	Ø36x7	1	539-060	Ø36x7	1	539-060	Ø36x7	1	539-060
B16	Ratchet controller	Ø100x3	1	540-054	Ø100x3	1	540-054	Ø100x3	1	540-054
B17	Line stripper	58x20	1	540-034	58x20	1	540-034	58x20	1	540-034
B18	Screw	MRT 6x20	4	155-621	MRT 6x20	4	155-621	MRT 6x20	4	155-621
B19	Bevel gear	Ø59/20-33	1	320-010	Ø54/20-41,5	1	320-012	Ø54/20-41,5	1	320-012
B20	Shaft	Ø20-140	1	540-011	Ø20x220	1	166-143	Ø20x220	1	166-143
B21	Washer	Ø36/20-3	1	164-421	Ø36/20-3	1	164-421	Ø36/20-3	1	164-421
B22	Protection cover	Ø57/18-20	1	540-126	Ø57/18-20	1	540-126	Ø57/18-20	1	540-126
B23	Hose	Ø24/19-26	1	540-027	-	-	-	-	-	-
B24	Ball bearing ring - inner	-	-	-	Ø38x8	2	540-106	Ø38x8	2	540-106
B25	Ball	Ø6	26	539-034	Ø8	24	539-128	Ø8	24	539-128
B26	Ball bearing ring - outer	Ø36x7	2	539-060	Ø44x8	2	539-223	Ø44x8	2	539-223
B27	Cover	63,5x39	1	540-055	74x21	1	540-155	74x21	1	540-155
B28	Backing plate	64x12	1	540-056	77x10	1	540-156	77x10	1	540-156
B29	Spring pin	Ø6x40	2	166-528	Ø6x32	1	166-509	Ø6x32	1	166-509
B30	Screw	MFT 5x12	1	162-048	MFT 5x12	1	164-048	MFT 5x12	1	164-048
B31	Lock washer	-	-	-	M5	1	164-051	M5	1	164-051

To be continued on page 8

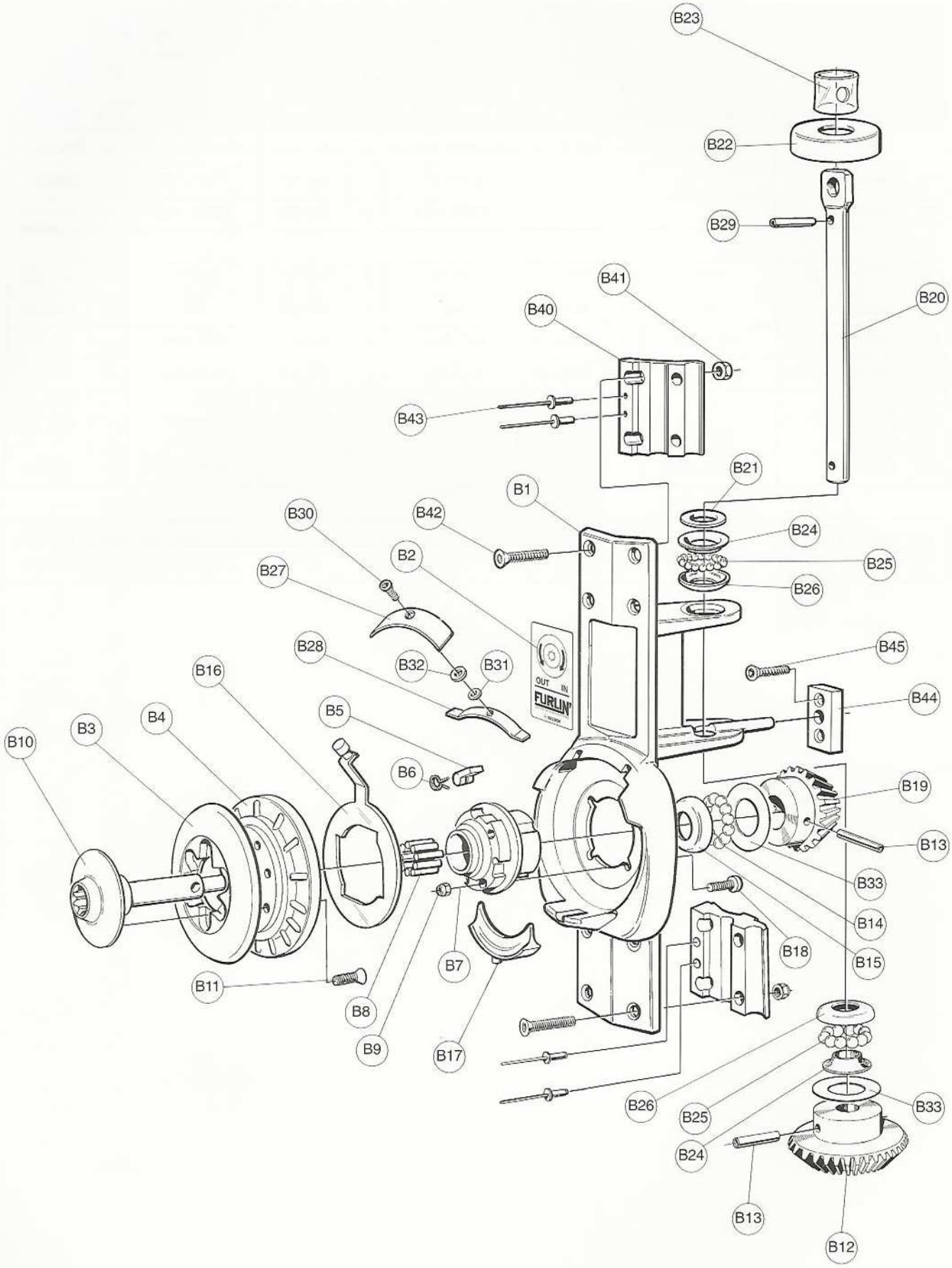
B23
B22
B29
B20
B41
B40
B43
B21
B1
B24
B42
B30
B25
B2
B26
B27
B45
B28
B32
B31
B44
B16
B5
B3
B4
B10
B6
B19
B13
B33
B14
B18
B15
B7
B11
B8
B9
B17
B26
B25
B33
B24
B13
B12
OUT
IN
FURLIN

Furling gear (Continued from page 6.)

Description B

		Type RA Mk III Mast extrusion 190/94 213/104 235/116			Type RA Mk II Mast extrusion 232/126 260/150			Type RA Mk II Mast extrusion 290/150		
Item	Description	Dimension	Qty	Part No	Dimension	Qty	Part No	Dimension	Qty	Part No
		Assembly number →		540-047-01	Assembly number →		540-142-01	Assembly number →		540-142-01
B32	Washer	-	-	-	Ø13/6-1,5	1	164-001	Ø13/6-1,5	1	164-001
B33	Washer	-	-	-	Ø37/21-0,5	3[1)]	164-439	Ø37/21-0,5	3[1)]	164-439
B40	Backing plate	62x30	2	540-014	70x74	2	540-103	70x74	2	540-103
B41	Locking nut	M6	4	158-005	M8	8	158-006	M8	8	158-006
B42	Screw	MFT 6x40	4	162-024	MFT 8x40	8	162-037	MFT 8x40	8	162-037
B43	Pop rivet AD625	Ø4,8x25,4	2	167-008	Ø4,8x25,4	4	167-008	Ø4,8x25,4	4	167-008
B44	Supporting bracket	-	-	-	-	-	-	70x30x15	1	540-125
B45	Screw	-	-	-	-	-	-	MFT 8x25	2	162-050

1)	Washers (164-439) are only intended as spacers to fill out possible excessive play. Correct quantities cannot therefore be specified. Washers may not be needed at all.

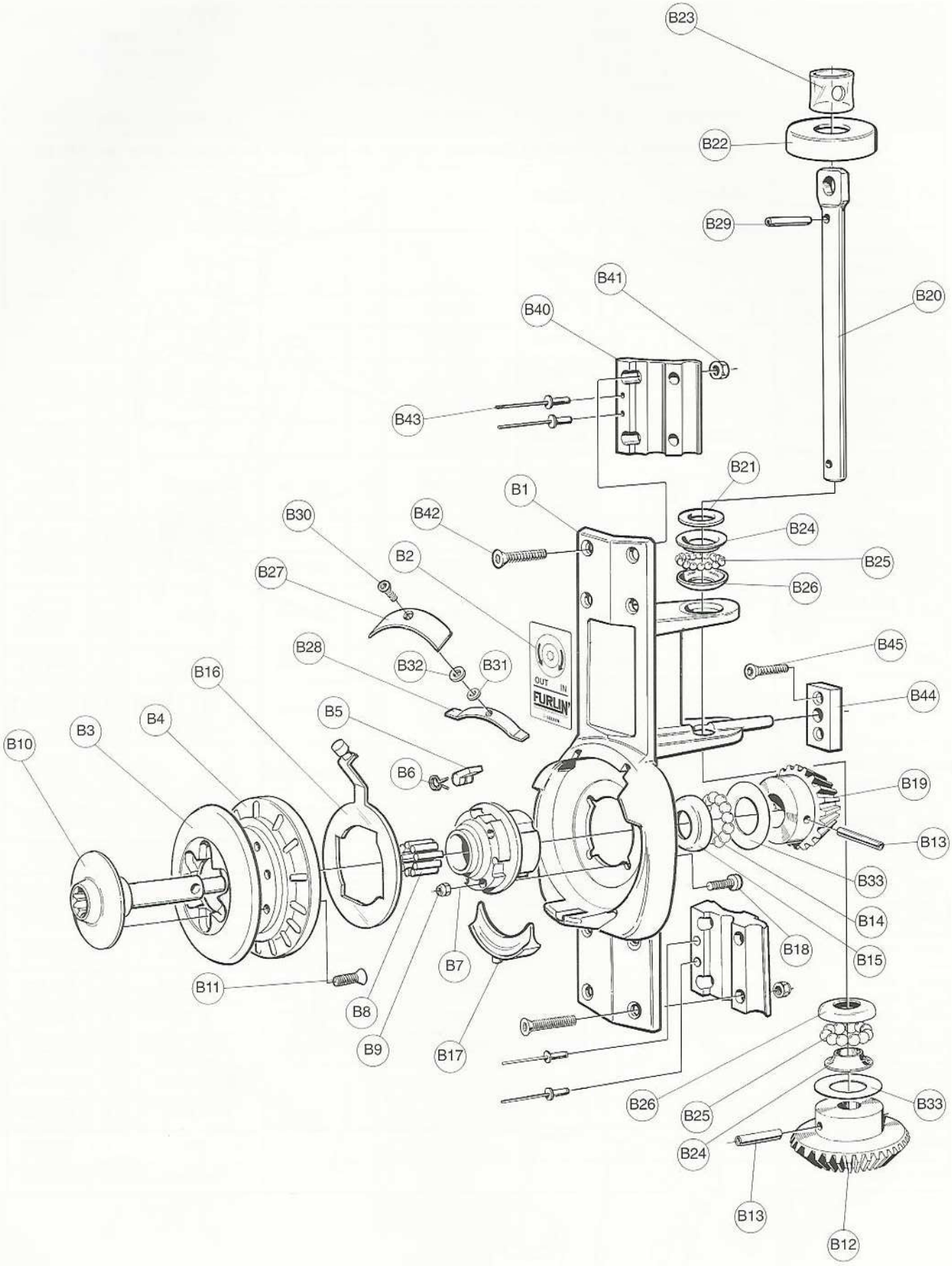
B23
B22
B29
B20
B41
B40
B43
B21
B1
B24
B42
B30
B25
B2
B26
B27
B45
B28
B32
B31
B44
B16
B5
B3
B4
B10
B6
B19
B13
B33
B14
B18
B15
B7
B11
B8
B9
B17
B26
B25
B33
B24
B13
B12
OUT
IN
FURLIN'

Top swivel

Description C

		Type RA Mk III Mast extrusion 190/94 213/104 235/116			Type RB Mk III Mast extrusion 232/126 260/150			Type RC Mk III Mast extrusion 290/150		
Item	Description	Dimension	Qty	Part No	Dimension	Qty	Part No	Dimension	Qty	Part No
		Assembly number →		540-039-01	Assembly number →		540-104-01	Assembly number →		540-204-01
C1	Ball bearing house	Ø73/50-76	1	540-039	-	-	-	-	-	-
C2	Ball bearing tube assembly	Ø44/28-41	1	540-038	-	-	-	-	-	-
C3	Plug	Ø20x20	1	319-628	-	-	-	-	-	-
C4	Split pin	Ø3,7x33	1	301-045	-	-	-	-	-	-
C5	Plastic plug	Ø48/45-22	1	319-627	-	-	-	-	-	-
C6	Clevis pin	Ø10x79	1	165-216	-	-	-	-	-	-
C7	Split pin	Ø2,3x16	1	301-048	-	-	-	-	-	-
C8	Ball bearing house half	-	-	-	Ø56x85	2	540-104	Ø66x105	2	540-204
C9	Screw	-	-	-	MCS 6x50	1	155-009	MRT 6x20	2	155-621
C10	Locking nut	-	-	-	M6	1	158-005	M6	2	158-005
C11	Ball bearing ring - outer	-	-	-	Ø44x8	1	539-223	Ø52x8	1	539-111
C12	Balls	Ø8	12	539-128	Ø8	12	539-128	Ø8	15	539-128
C13	Ball bearing ring - inner	-	-	-	Ø38x8	1	540-106	-	-	-
C14	Ball bearing ring connector	-	-	-	Ø32x75	1	540-105	-	-	-
C15	Ball bearing eye	-	-	-	-	-	-	Ø44/22-75	1	540-205
C20	Pop rivet LD639	Ø4,8x9,9	3	167-007	-	-	-	-	-	-
C20	Pop rivet LD665	-	-	-	Ø4,8x16,5	4	167-006	-	-	-
C20	Pop rivet LD870	-	-	-	-	-	-	Ø6,4x17,8	6	167-002
C21	Screw	-	-	-	M6S 10x70	1	151-070	M6S 10x70	1	151-070
C22	Locking nut	-	-	-	M10	1	158-007	M10	1	158-007
C23	Washer	-	-	-	Ø20/10,5-2	2	164-403	Ø16/8-1,5	2	164-401
C24	Bush	-	-	-	-	-	-	Ø14/10-29,6	1	306-515
C25	Screw	-	-	-	-	-	-	M6S 8x90	1	151-049
C26	Locking nut	-	-	-	-	-	-	M8	1	158-006
C27	Strap	-	-	-	-	-	-	12x25x60	2	507-891

Type RA MK III

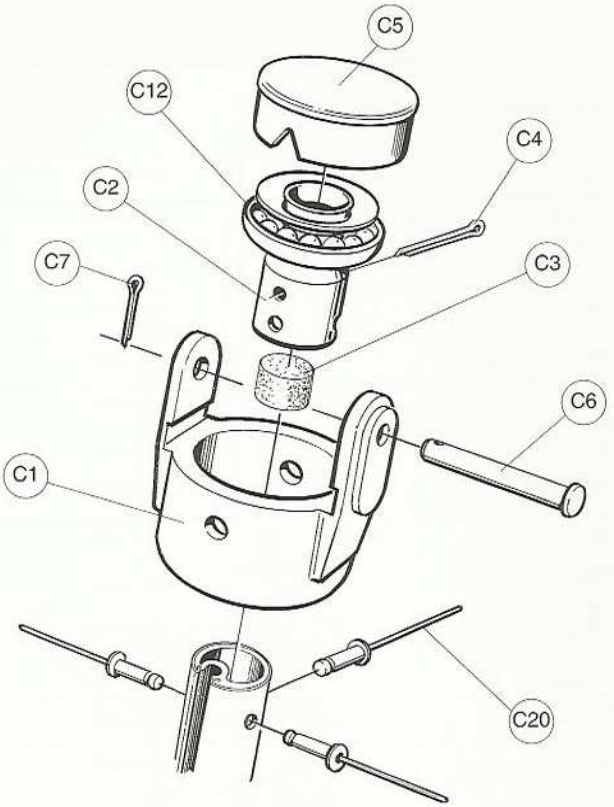

Type RB MK III

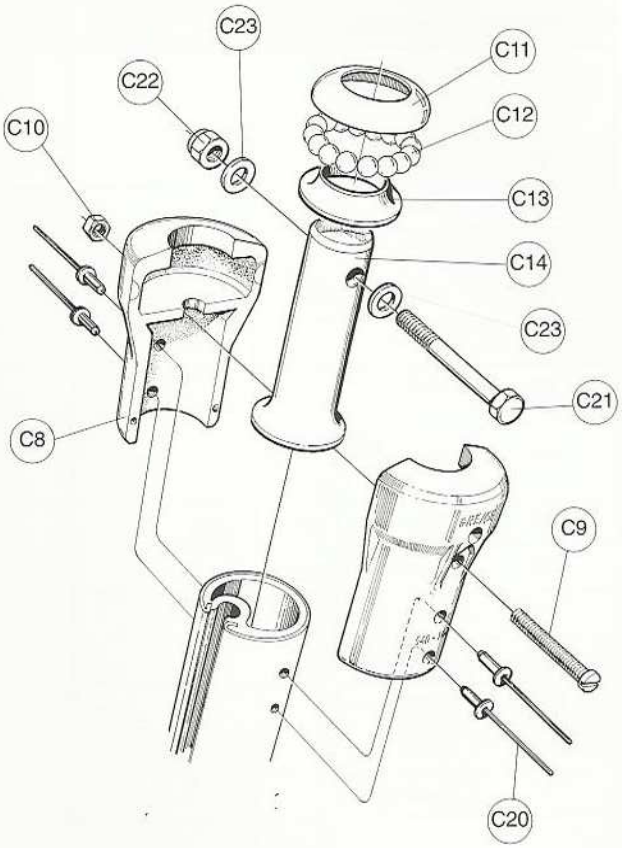

Type RC MK III

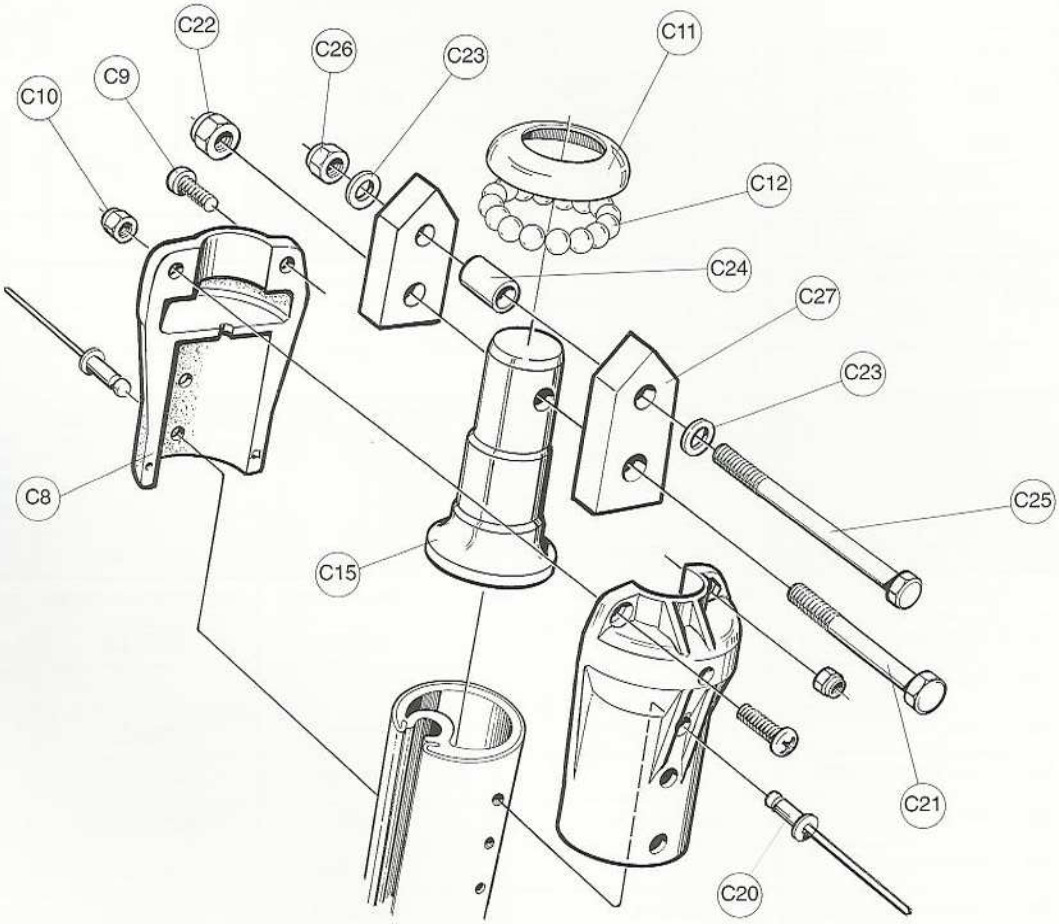

Tack assembly

Description D

		Type RA Mk III Mast extrusion 190/94 213/104 235/116		
Item	Description	Dimension	Qty	Part No
		Assembly number	➔	540-710-11 -12 1)
D1	Tack tube	Ø24,5-291	1	540-710
D2	Insulator	Ø26,5-40	1	540-071
D3	Tack hook	Ø26,5/32-38	1	536-252
D4	Pop rivet LD639	Ø4,8x9,9	2	167-007
D5	Wheel	Ø70/26-20	1	319-599
D6	Split pin	Ø3,7x33	1	301-045
D7	Reinforcement plug	Ø20/15,6-50 Ø20/15,6-240 1)	1	540-030 540-037 1)
D8	Pop rivet LD639	Ø4,8x9,9	1	167-007
D9	Tensioning screw	M10/Ø20-132	1	540-040
D10	Screw	MCS 6x16	1	155-015
D11	Pop rivet LD639	Ø4,8x9,9	3	167-007
D12	Locking tube	Ø29-250	1	540-067
D13	Label	40x20	1	591-191
-	Sealing plug	Ø4,8 rivet	1	319-510
D20	Adapter	Ø30/26-65-65 Ø30/26-65-45 2)	1	540-065 540-012 2)
D21	Clevis pin	Ø6x36	1	165-007
D22	Split pin	Ø2,3x12	1	301-047
D23	Clevis pin	Ø6x36	1	165-007
D24	Split pin	Ø2,3x12	1	301-047

1)	Furlin´RA heavy duty version
2)	Furlin´RA short version (Before 1996)

		Type RB Mk III Mast extrusion 232/126 260/150					
		Boom extrusion 143/76 171/94			Boom extrusion 200/117 250/140		
Item	Description	Dimension	Qty	Part No	Dimension	Qty	Part No
		Assembly number	➔	540-136-01	Assembly number	➔	540-137-01
D1	Tack tube	30/29-346	1	540-136	30/29-442	1	540-137
D2	Insulator	-	-	-	-	-	-
D3	Tack hook	Ø38-42	1	536-251	Ø38-42	1	536-251
D4	Pop Rivet LD 850	Ø6,4x12,7	2	167-004	Ø6,4x12,7	2	167-004
D5	Wheel	Ø80/31,5-20	1	319-600	Ø80/31,5-20	1	319-600
D6	Split pin	Ø3,7x33	1	301-045	Ø3,7x33	1	301-045
D7	Reinforcement plug	23/20-60	1	540-139	23/20-60	1	540-139

To be continued on page 14

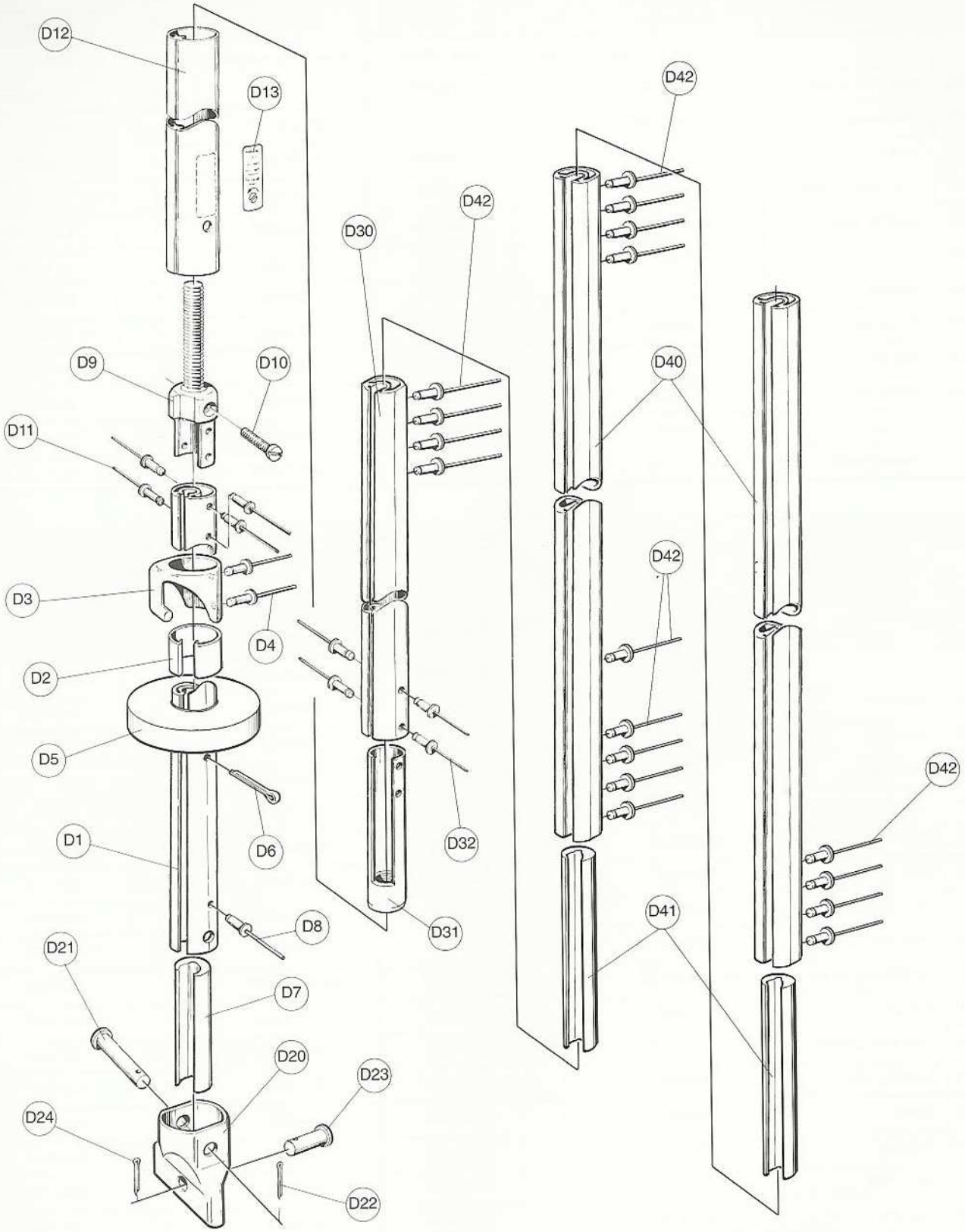
D12
D13
D42
D42
D30
D9
D10
D40
D11
D42
D3
D4
D2
D5
D42
D6
D32
D1
D8
D31
D41
D21
D7
D20
D23
D24
D22

Tack assembly (Continued from page 12.) Description D

		Type RB Mk III Mast extrusion 232/126 260/150					
		Boom extrusion 143/76 171/94			Boom extrusion 200/117 250/140		
Item	Description	Dimension	Qty	Part No	Dimension	Qty	Part No
		Assembly number	➤	540-136-01	Assembly number	➤	540-137-01
D8	Pop rivet LD639	Ø4,8x9,9	1	167-007	Ø4,8x9,9	1	167-007
D9	Tensioning screw	M12/Ø25-120	1	540-132	M12/25-120	1	540-132
D10	Screw	MCS 6x22	1	155-034	MCS 6x22	1	155-034
D11	Pop rivet LD639	Ø4,8x9,9	4	167-007	Ø4,8x9,9	4	167-007
D12	Locking tube	Ø35x200	1	540-134	Ø35x200	1	540-134
D13	Label	40x20	1	591-191	40x20	1	591-191
D20	Adapter	Ø38x65	1	540-135	Ø38x65	1	540-135
D21	Clevis pin	Ø10x40	1	165-211	Ø10x40	1	165-211
D22	Split pin	Ø2,3x16	1	301-048	Ø2,3x16	1	301-048
D23	Clevis pin	Ø12x25	1	165-401	Ø12x25	1	165-401
D24	Split pin	Ø2,9x16	1	301-049	Ø2,9x16	1	301-049
-	Sealing plug	Ø4,8 rivet	1	319-510	Ø4,8 rivet	1	319-510

		Type RC Mk III Mast extrusion 290/150					
		Boom extrusion 143/76 171/94			Boom extrusion 200/117 250/140		
Item	Description	Dimension	Qty	Part No	Dimension	Qty	Part No
		Assembly number	➤	540-229-01	Assembly number	➤	540-230-01
D1	Tack tube	38/38-381	1	540-229	38/38-477	1	540-230
D2	Insulator	Ø40x60	1	540-231	Ø40x60	1	540-231
D3	Tack hook	Ø45-95	1	540-224	Ø45-95	1	540-224
D4	Pop rivet LD639	Ø4,8x9,9	4	167-007	Ø4,8x9,9	4	167-007
D5	Wheel	Ø90/40-30	1	319-601	Ø90/40-30	1	319-601
D6	Split pin	Ø3,7x50	1	301-010	Ø3,7x50	1	301-010
D7	Reinforcement plug	35/25-60	1	540-232	35/25-60	1	540-232
D8	Pop rivet LD639	Ø4,8x9,9	1	167-007	Ø4,8x9,9	1	167-007
D9	Tensioning screw	M16/Ø32-177	1	540-225	M16/Ø32-177	1	540-225
D10	Screw	MCS 6x22	1	155-034	MCS 6x22	1	155-034
D11	Pop rivet LD850	Ø6,4x12,7	6	167-004	Ø6,4x12,7	6	167-004
D12	Locking tube	Ø44x300	1	540-227	Ø44x300	1	540-227
D13	Label	40x20	1	591-191	40x20	1	591-191
D20	Adapter	Ø44x78	1	540-228	Ø44x78	1	540-228
D21	Clevis pin	Ø12x53	1	165-403	Ø12x53	1	165-403
D22	Split pin	Ø2,9x16	1	301-049	Ø2,9x16	1	301-049
D23	Clevis pin	Ø12x25	1	165-401	Ø12x25	1	165-401
D24	Split pin	Ø2,9x16	1	301-049	Ø2,9x16	1	301-049
-	Sealing plug	Ø4,8 rivet	1	319-510	Ø4,8 rivet	1	319-510

Sail feeder assembly

		Type RA Mk III Mast extrusion 190/94 213/104 235/116			Type RB Mk III Mast extrusion 232/126 260/150			Type RC Mk III Mast extrusion 290/150		
Item	Description	Dimension	Qty	Part No	Dimension	Qty	Part No	Dimension	Qty	Part No
		Assembly number →		540-711-11 -12[1]	Assembly number →		540-154-01	Assembly number →		540-233-01
D30	Sailfeeder extrusion	Ø25,5-380 Ø25,5-2000	1	540-711 540-073[1) 2)]	Ø30/29-390	1	540-154	Ø38/38-330	1	540-233
D31	Tensioning screw body	M10/Ø20-113	1	540-041	M12/Ø25-101	1	540-133	M16/Ø34-162	1	540-226
D32	Pop rivet LD639	Ø4,8x9,9	3	167-007	Ø4,8x9,9	4	167-007	-	-	-
D32	Pop rivet LD850	-	-	-	-	-	-	Ø6,4x12,7	6	167-004
D41	Joint sleeve	-	-	-	-	-	-	33/25-200	1	540-215
D42	Pop rivet LD639	-	-	-	-	-	-	Ø4,8x9,9	8	167-007
-	Sealing plug	-	-	-	-	-	-	Ø4,8 rivet	8	319-510
-	Pop rivet LD639	Ø4,8x9,9	1	167-007 [1)]	-	-	-	-	-	-
-	Reinforcement sleeve	Ø20/15,6-1600	1	540-072 [1)]	-	-	-	-	-	-

1)	Furlin´RA heavy duty version
2)	Luff extrusion cover (535-751) included

Luff extrusion

		Type RA Mk III Mast Extrusion 190/94 213/104 235/116			Type RB Mk III Mast Extrusion 232/126 260/150			Type RC Mk III Mast Extrusion 290/150		
Item	Description	Dimension	Qty	Part No	Dimension	Qty	Part No	Dimension	Qty	Part No
		Assembly number →		-	Assembly number →		-	Assembly number →		-
D40	Luff extrusion assembly	Ø24,5-6500	2	540-035-01[1)]	30/29-7700	2 3[2)]	540-111-01	38/38-7700	3	540-217-01
D41	Joint sleeve	Ø20/15-100	2	540-043	23/20-180	1 2[2)]	540-148	33/25-200	2	540-215
D42	Pop rivet LD639	Ø4,8x9,9	9	167-007	Ø4,8x9,9	17 25[2)]	167-007	Ø4,8x9,9	41	167-007
-	Sealing plug	Ø4,8 rivets	9	319-510	Ø4,8 rivet	17 25[2)]	319-510	Ø4,8 rivet	41	319-510

1)	Luff extrusion cover included (RA: 535-751; RB: 535-635; RC: 535-641)
2)	Boom extrusions 200/117 & 250/140

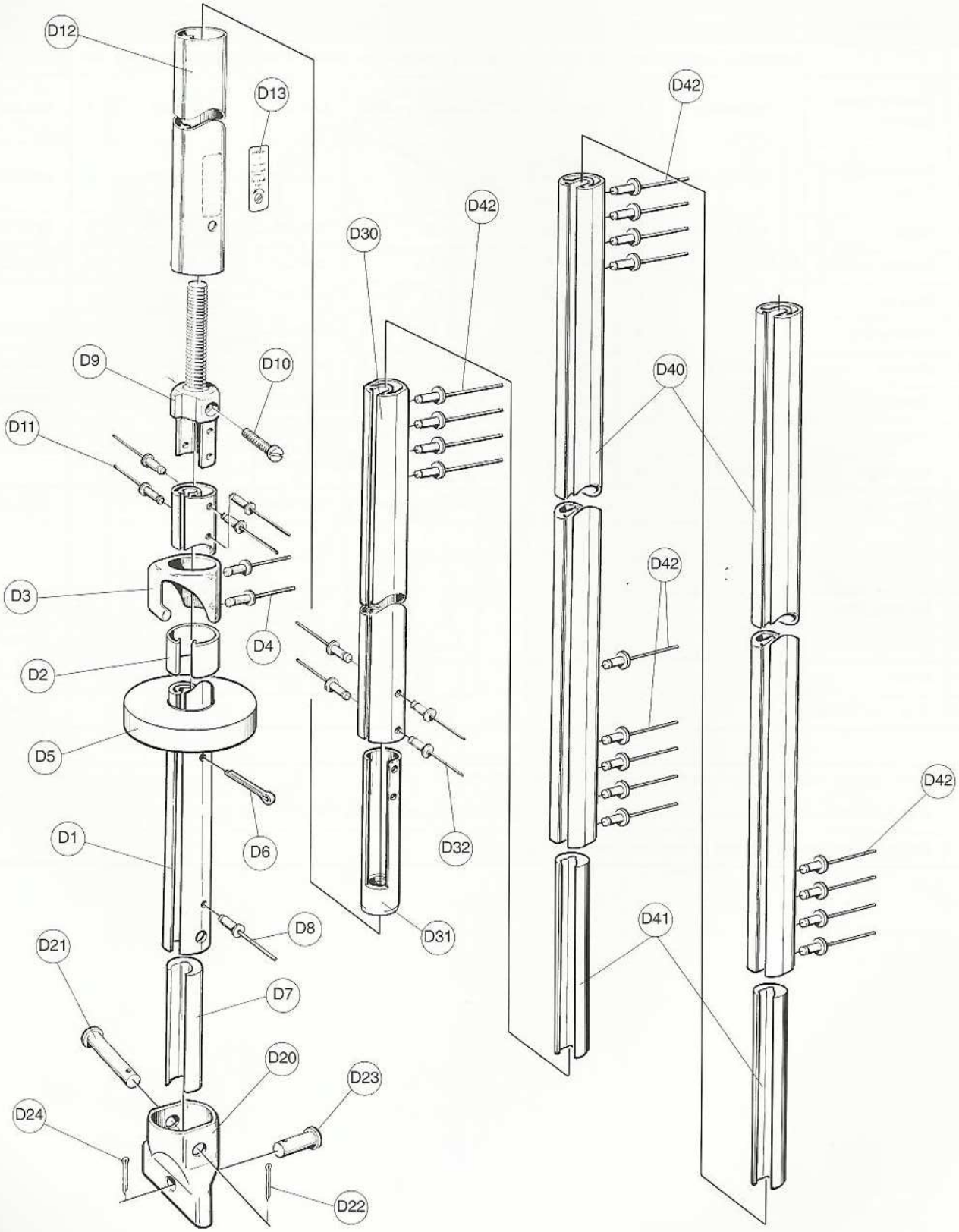
D12
D13
D42
D30
D42
D9
D10
D40
D11
D42
D3
D4
D2
D5
D42
D6
D32
D1
D8
D31
D41
D21
D7
D20
D23
D24
D22

Swinging lead

Description E

		Type RA Mk III						Type RB Mk III		
		Mast extrusion 190/94 213/104			Mast extrusion 235/116			Mast extrusion [3] 232/126 260/150		
Item	Description	Dimension	Qty	Part No	Dimension	Qty	Part No	Dimension	Qty	Part No
		Assembly number →		540-154-01	Assembly number →		540-160-01	Assembly number →		540-157-01
E1	Sheave house bracket	150x94X63	1	508-154	150x120	1	508-160	150x120	1	508-157
E2	Swinging sheave house	2xØ45x13	2	505-034	2xØ70x16	2	505-039	2xØ70x16	2	505-039
E3	Screw	M6S 8x30	2	151-043	M6S 8x30	2	151-043	M6S 8x30	2	151-043
E4	Washer-serrated	Ø15/8,4-2,4	2	164-427	Ø15/8,4-2,4	2	164-427	Ø8,4/15-2,4	2	164-427
E5	Washer	Ø16/8-1,5	2	164-401	Ø16/8-1,5	2	164-401	-	-	-
E6	Locking nut	M8	2	158-006	M8	2	158-006	M8	2	158-006
E7	Sheave	Ø45/8-13	4	504-320	Ø70/12-16	4	504-332	Ø70/12-16	4	504-332
E8	Clevis pin	Ø8x50	2	165-108	Ø12x53	2	165-403	Ø12x53	2	165-403
E9	Split pin	-	-	-	Ø2,9x18	2	301-050	Ø2,9x18	2	301-050
-	Split ring [1]	Ø20x1,5	2	301-015	-	-	-	-	-	-
E11	Separator	-	-	-	72x59	2	537-034	72x59	2	537-034
-	Pop rivet LD 870 [2]	Ø6,4x17,8	6	167-002	Ø6,4x17,8 (long)	6	167-025	-	-	-
E13	Backing plate	-	-	-	-	-	-	70x74	1	540-103
E14	Locking nut	-	-	-	-	-	-	M8	4	158-006
E15	Screw	-	-	-	-	-	-	MFT 8x40	4	162-037
E16	Pop rivet LD665	-	-	-	-	-	-	Ø4,8x16,5	2	167-006

1)	Split ring (not shown) replacing split pin (E9) in assembly 540-154-01
2)	Pop rivets (not shown) replacing fastening components (E13 - E16) in assemblies 540-154-01 & 540-160-01
3)	Swinging lead cannot be fitted to mast extrusion 290/150

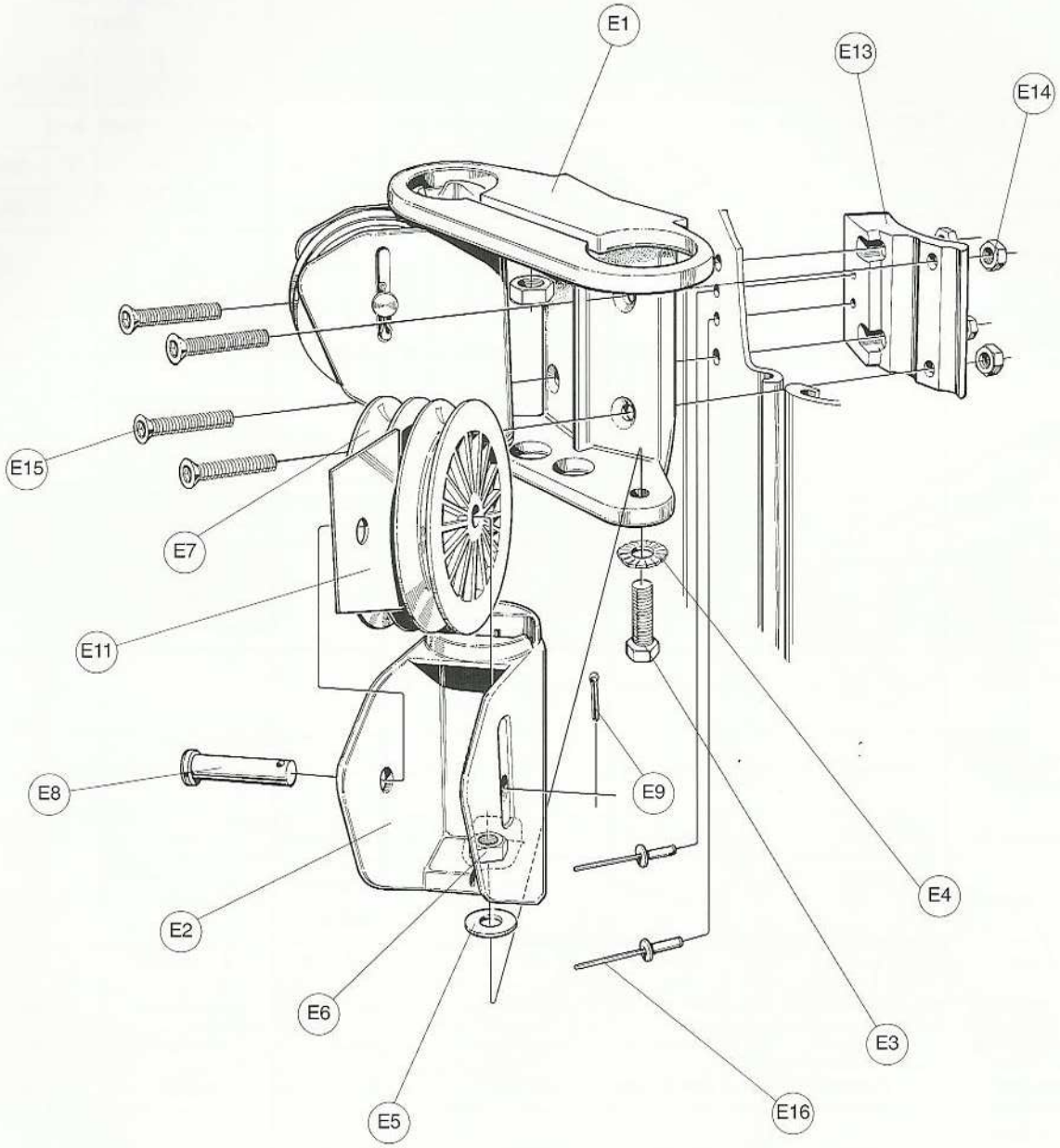
E1
E13
E14
E15
E7
E11
E8
E9
E2
E6
E5
E4
E3
E16

Additional items

Description F

		Type RA Mk III Mast extrusion 190/94 213/104 235/116			Type RB Mk III Mast extrusion 232/126 260/150			Type RC Mk III Mast extrusion 290/150		
Item	Description	Dimension	Qty	Part No	Dimension	Qty	Part No	Dimension	Qty	Part No
		Assembly number →		-	Assembly number →		-	Assembly number →		-
F1	Cover	57x126	2	540-026	72x207	2	540-120	72x207	2	540-120
F2	Sail slot cover	-	-	-	38x20	1[1]	535-634	38x20	1[1]	535-634
F3	Grease hole cover	Ø44	2	319-609	Ø44	2	319-609	Ø44	2	319-609
F4	Lubricating grease	≈100g	1	312-501	≈100g	2	312-501	≈100g	1	312-501
F5	Manual (Swedish)	A4	1	595-059-S [2]	A4	1	595-063-S	A4	1	595-063-S
F5	Manual (English)	A4	1	595-059-E [2]	A4	1	595-063-E	A4	1	595-063-E
F5	Manual (German)	A4	1	595-059-T [2]	A4	1	595-063-T	A4	1	595-063-T
F6	Manual addition (Swedish)	A4	1	595-087-S	-	-	-	-	-	-
F6	Manual addition (English)	A4	1	595-087-E	-	-	-	-	-	-
F6	Manual addition (German)	A4	1	595-087-T	-	-	-	-	-	-
F7	Spare parts list	A4	1	595-110-E	A4	1	595-110-E	A4	1	595-110-E
F8	Internal separator	-	-	-	T=30	1	530-905[6] 530-907[6]	T=30	1	530-909
F9	Rope clutch	6 - 12 mm	1	511-134	6 - 12 mm	1	511-134	6 - 12 mm	1	511-134
F10	Deck organizer [5]	3 sheaves	1	538-809-01	3 sheaves	1	538-809-01	3 sheaves	1	538-809-01
F10	Deck organizer [5]	4 sheaves	1	538-810-01	4 sheaves	1	538-810-01	4 sheaves	1	538-810-01
F11	Endless line	2x5000	1	611-011-05	2x7000	1	611-011-06	2x9000	1	611-011-07
F12	Outhaul lead block [3] [4]	R345	1	538-992-01	R345	1	538-992-01	-	-	-
F12	Outhaul lead block [3] [4]	R545	1	538-993-01	R545	1	538-993-01	R545	1	538-993-01
F12	Outhaul lead block [3] [4]	-	-	-	-	-	-	R645	1	538-994-01
F13	U-lead [4]	"small"	1	508-124-01	"small"	1	508-124-01	"small"	1	508-124-01

1)	Variable length. Length to be specified when ordered.
2)	Manual must be accompanied by manual addition (595-087-S/E/T)
3)	Size of lead block depends on boom size; 120/62 & 143/76: R345; 171/94: R545; 200/117 & 250/140: R645
4)	U-lead can be used instead of lead block and vice versa.
5)	Removable sheaves for endless line.
6)	232/126: 530-905; 260/150: 530-907

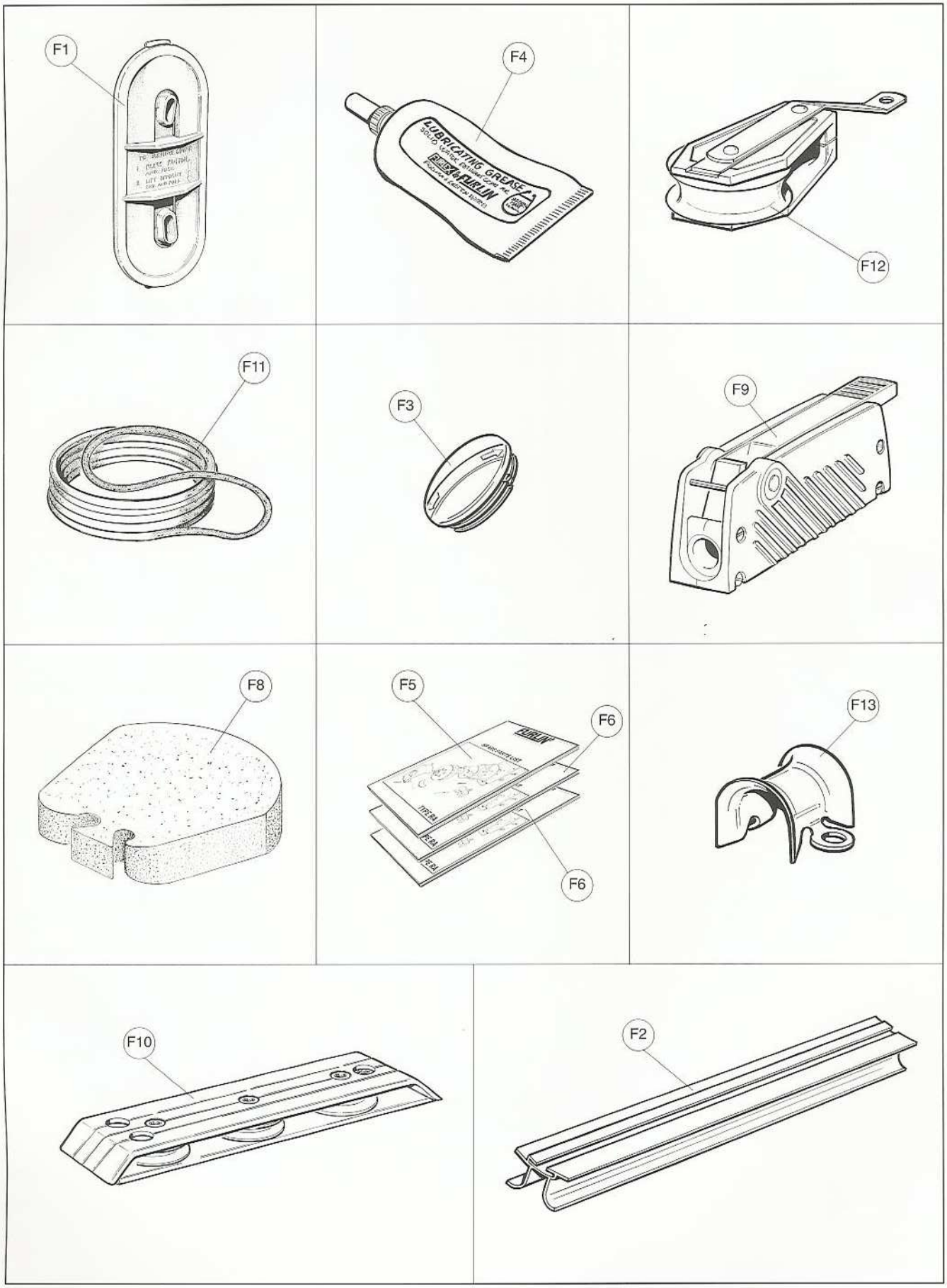
F1
F4
LUBRICATING GREASE
F12
F11
F3
F9
F8
F5
F6
F6
F13
F10
F2

Fast access to our know-how, worldwide

The Seldén Group is one of the world's leading manufacturers of spar and rigging systems. Our comprehensive range caters for dinghies, performance dayboats and yachts up to 30 tonnes. The group consists of Seldén Mast AB and YRAB, both in Sweden, and Seldén Masts Ltd in the UK. Our well known product names are Seldén, Furlex, Furlin', Furlex Main, Proctor and Hasselfors.

At Seldén we are sailors. Our extensive sailing experience combined with practical engineering knowledge are at the heart of our business. It guarantees care, attention to detail and a total commitment to quality.

With development and production facilities on Sweden's west coast and England's south coast, we have unique opportunities to test and develop our products under tough, practical, sea-going conditions. All manufacturing is carried out in accordance with strict quality control routines.

Our quality philosophy does not stop at the production line, but is extended to our authorized distribution and service network through a complete programme of training courses, instruction manuals and films. Everything, in fact, to ensure customer satisfaction.

Based on our global success with Furlex we have built a network of over 500 authorized dealers covering the marine markets of the world. So wherever you sail, you can be sure of fast access to our service, spare parts and know-how.

SELDÉN MAST **SELDÉN**

Seldén Mast AB, Redegatan 11, SE-426 77 V. Frölunda, Sweden.
Tel +46 (0)31 69 69 00. Fax +46 (0)31 29 71 37. e-mail info@seldenmast.com. Internet www.seldenmast.com
Seldén Masts Limited, Duncan Road, Park Gate, Southampton, Hampshire SO31 1BX, England.

595-110-E/98-10-12 Boab Tryckeri AB, Printed in Sweden.

595-059-E
98-11-04

FURLIN'

MAIN FURLING & REEFING SYSTEM

SELDÉN

Manual

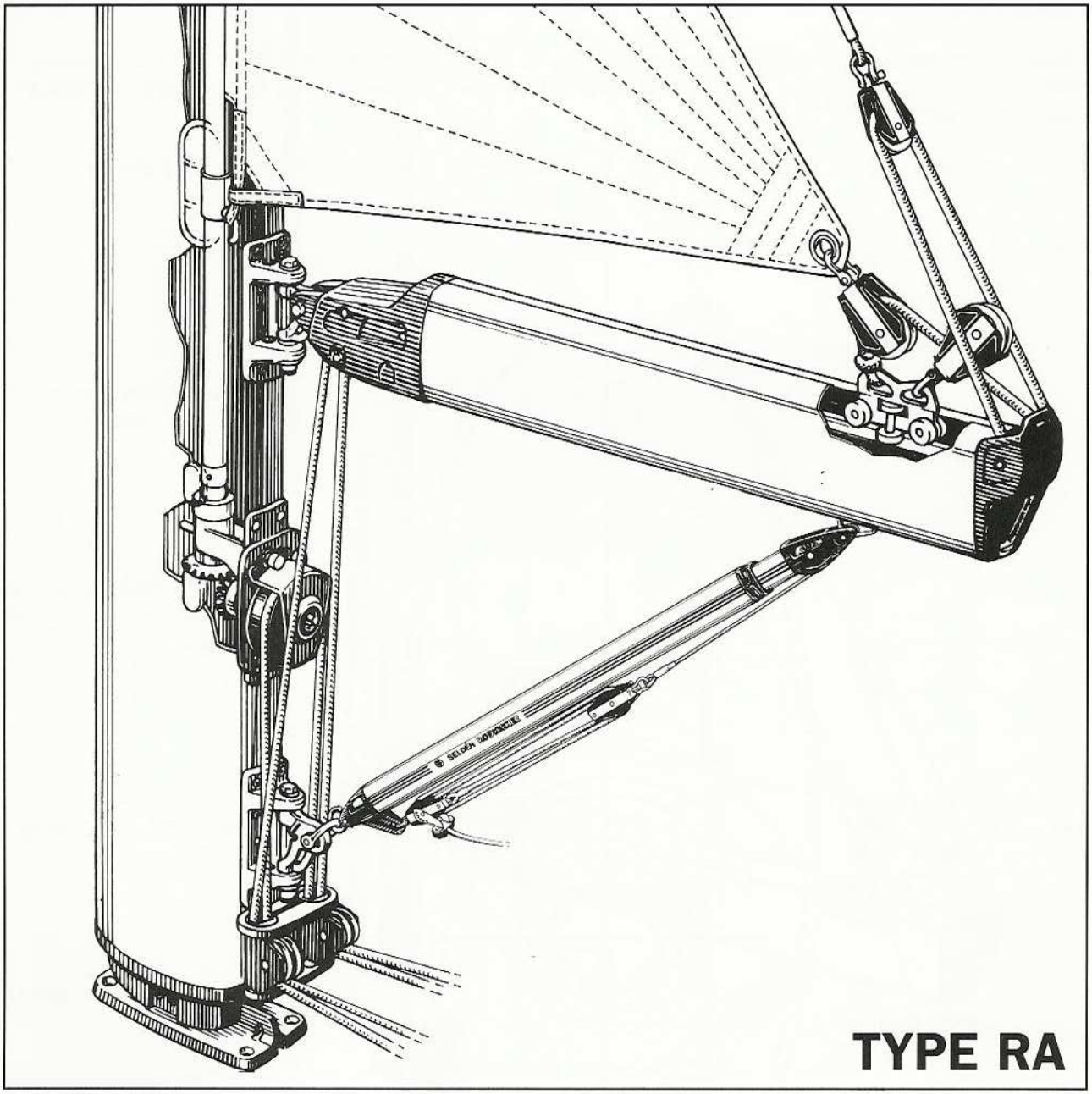

Contents:	Page:	Contents:	Page:
Product Description	2	Spare Mainsail	7
Operation & Operational Hints	4	Anti-vibration Strip	8
Fitting and Hoisting the Sail	6	Running Cables	8
Before Sailing	6	Maintenance	8
The Sail	7	Dismantling	10