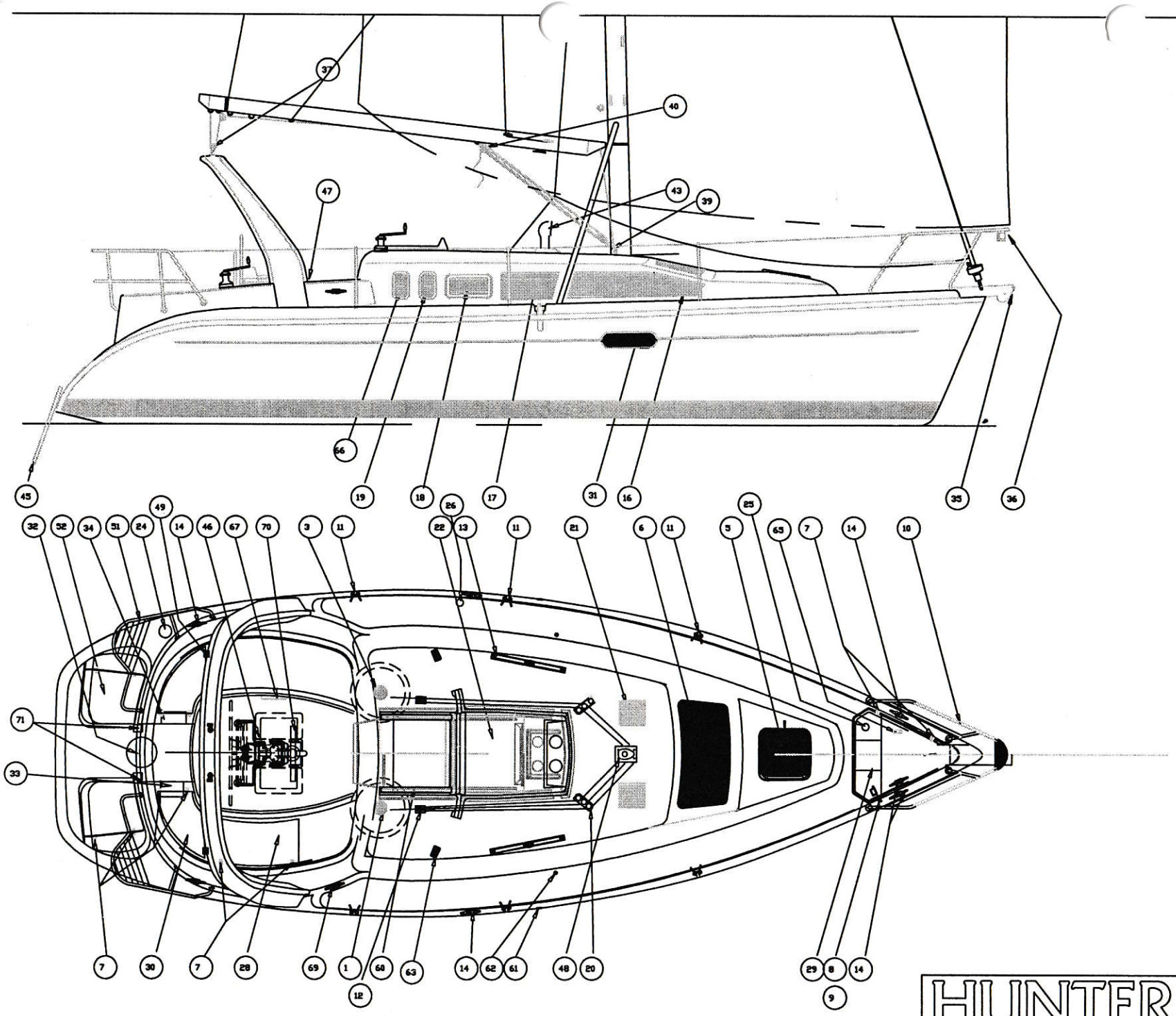

DECK HARDWARE LAYOUT

HUNTER

H-310 DECK LAYOUT

DRAWING # 3108038A

PAGE 38A

310 DECK GEAR

11/23/96

NUMBER	PART	HUNTER #	MANUFACTURER	MANUFACT #	FILE NAME	QUANTITY
1	WINCH	HW2519	LEWMAR	30ST		1
3	WINCH	HW2518	LEWMAR	16ST		1
5	FWD HATCH	HW0120	BOMAR	1080-10A		1
	TRIM RING	HW				1
	SCREEN	HW				1
6	CABIN WINDSHIELD	PX				1
21	MID HATCH	HW0014	LEWMAR	COAST 10		2
	TRIM RING	HW				2
	SCREEN	HW				2
7	HINGE	HW4172	GEM			12
8	ANCHOR LOCKER HANDLE	HW4481	SOUTHCOAST			1
9	STRIKER PLATE	HW	KENS		30620024	1
10	BOW PULPIT	HW	SOUTHCOAST		306008	1
11	STANCHION 450 TYPE	HW1747	SOUTHCOAST		30620018	6
12	HALYARD STOPPER STBD	HW1259	SPINLOCK	XA3		2
	HALYARD STOPPER PORT	HW1276	SPINLOCK	XA2		
13	JIB TRACK	29.5 STYLE	25" LONG			2
	JIB TRACK ENDS	HWO205	SCHAEFER			2
	JIB TRACK CAR	HW0238	SCHAEFER			2
14	CLEAT	HWO975				7
69	CLEAT	HW0980				1
15	CABIN WINDSHIELD	PX	VIPLEX			1
16	WINDOW (PLEXI)	PX				2
17	WINDOW PLEXI)	PX				2
18	WINDOW	PX0323				2
19	OPENING WINDOW	HW0043				2
66	WINDOW (PLEXI)	PL				2
67	WINDOW (COCKPIT)	HW0039				1
	TRIM RING	HW				1
	SCREEN	HW				1
20	HALYARD ORGANIZER	HWO399	SCHAEFER	505-81		2
22	SEA HOOD		GLASS PART		3060003	1
24	DIESEL FILL	PL1126	SEADOG			1
25	WATER FILL	PL1130	SEADOG			1
26	WASTE PUMP OUT	PL1140	TIMA			1
28	FORMER EURO HATCH LID		GLASS PART			1
29	ANCHOR HATCH LID		GLASS PART			1
30	GULL WING HATCH LID		GLASS PART			2
31	HULL SIDE PORT (FIXED)	PX	NORTH FLORIDA			2
32	INSPECTION PORT	VC010004	BECKSON			1
33	TRANSOM SHOWER	PLO189	SAILING SPEC			1
34	BILGE PUMP	PLO371	RULE			1
35	BOW ROLLER	HW161O	SOUTHCOAST		30620023	1
36	BOW LIGHT	ELO380	HELLA			1
37	MAINSHEET SYSTEM					
	ARCH MS. BLOCK	HW	HARKEN	O11		2
	BOOM BLOCK MS.	HW	HARKEN	O11		1
	STRAP EYE	HW	HARKEN	1558		2
	SPRING	HW	HARKEN	71		2
39	VANG BLOCK	HW0211	SCHAEFER	505-45		1
40	VANG BLOCK	HW0280	SCHAEFER	505-75		1
43	DORADE	HW4257	MARINCO			2
45	SWIM LADDER	HW	WINDLINE	TLD-3X		1
46	COCKPIT TABLE	N/A	HUNTCI MIII			1
	STEERING SYSTEM	HW	EDSON	RACK AND PINYON		1
47	COMPASS	LGO135	RITCHIE	PO79397		1
48	MAST STEP	HW	Z-SPAR	1103		1