Hunter 31
AC/DC ELECTRICAL DIAGRAM

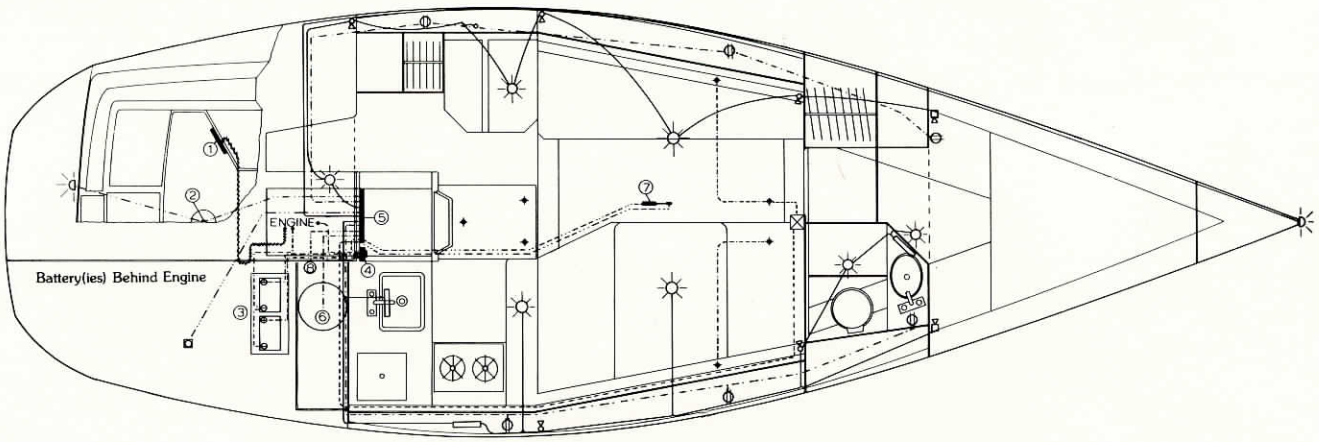

LEGEND:

① ENGINE IGNITION PANEL
② COMPASS LIGHT
③ BATTERIES
④ SAFETY MAIN SWITCH
⑤ SWITCH PANEL
⑥ WATER HEATER
⑦ BILGE PUMP W/AUTOMATIC FLOAT SWITCH
⑧ PRESSURIZED WATER PUMP

SYMBOLS:

- MAST
- SHORE POWER INLET
- 110v OUTLET
- ROUND CABIN LIGHTS (LG)
- ROUND CABIN LIGHTS (SM)
- WHITE CABIN LIGHTS
- SINGLE LIGHT (SILVER)

Continued on next page

Hunter 31
ELECTRICAL DIAGRAM CONTINUED

- BOW & STERN LIGHTS
- FLOURESCENT LIGHTS (SM)
- CHART LIGHT
- KEEL BOLTS
- CHAINPLATES
- 16 GA. WIRE
- 12 GA. WIRE
- 8 GA. WIRE (GRD)
- 4 GA. BATTERY CABLE
- 14/2 GREY MARINE POWER
- 14/3 MARINE POWER
- 10/3 MARINE POWER
- IGNITION WIRES
- WIRE HARNESS (TO MAST)

WIRING NOTES:

COLOR:	GAUGE:	APPLICATION:
RED	16	ANCHOR LIGHT
GREEN	16	STEAMING LIGHT
BLUE	16	CABIN LIGHTS
WHITE	16	BOW LIGHT
RED	12	PRESSURIZED WATER PUMP
BROWN	12	BILGE PUMP
BEIGE	12	SAFETY MAIN SWITCH TO INLINE FUSE AT PANEL, PANEL TO AUTOMATIC FLOAT SWITCH AT BILGE PUMP
RED	10	DC SUPPLY TO PANEL
BLACK	8	MAST AND CHAINPLATE GROUNDS
RED	4	BATTERY CABLES

ALL LEADS EXCEPT FLOAT SWITCH, MAST GROUND, AND CHAINPLATE GROUNDS ARE RUN WITH A BLACK WIRE OF EQUAL GAUGE. THESE ARE CONNECTED TO A COMMON GROUND AT THE SWITCH PANEL WHICH IS GROUNDED TO THE ENGINE WITH A 10 GAUGE BLACK WIRE.

WIRE HARNESS TO MAST CONSISTS OF ONE (1) RED (ANCHOR LIGHT) AND ONE (1) GREEN (STEAMING LIGHT) 16 GAUGE WIRE.