Hunter 31
PLUMBING DIAGRAM

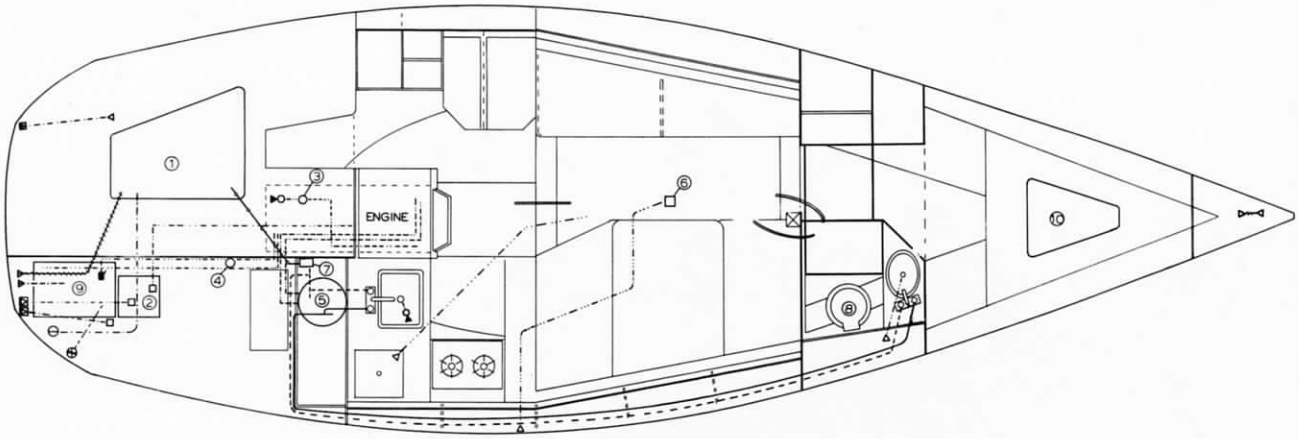

LEGEND:
1. WATER TANK 33 gl
2. WATERLOCK (MUFFLER)
3. SEA STRAINER
4. FUEL FILTER
5. WATER HEATER
6. ELECTRIC BILGE PUMP
7. PRESSURIZED WATER PUMP
8. HEAD
9. FUEL TANK 18 gl
10. HOLDING TANK 20 gl
11. VENTED LOOP
12. MANUAL WASTE PUMP

SYMBOLS:
- △ THRU HULL (PLASTIC)
- ▲ THRU HULL (BRONZE)
- ◬ VENT
- ○ GATE VALVE
- □ SCUPPER TUBE

Continued on next page

Hunter 31
PLUMBING DIAGRAM CONTINUED

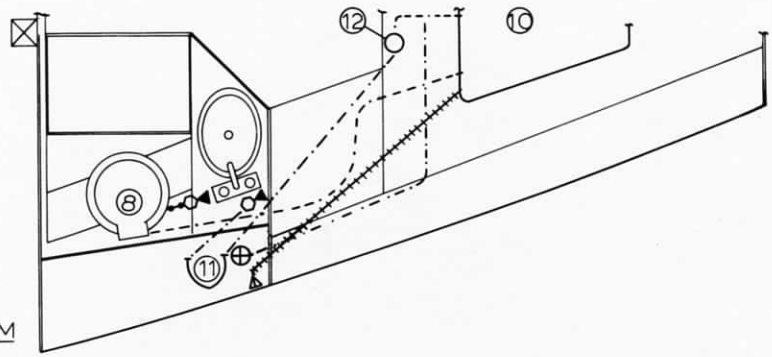

HEAD PLUMBING DIAGRAM

- THRU HULL SCUPPER TUBE
- WATER FILL DECK PLATE
- WASTE DECK PLATE
- FUEL FILL DECK PLATE
- FUEL SHUTOFF VALVE
- MAST POST
- COLD WATER (POLYBUTYLENE TUBING 3/8" ID x 1/2" OD)
- HOT WATER (POLYBUTYLENE TUBING 3/8" ID x 1/2" OD)
- 1-1/2" FUEL FILL HOSE
- 2" SHIELDSAUST HOSE
- 1-1/2" SHIELDVAC HOSE W/CUFFS
- 1-1/4" SHIELDVAC HOSE W/CUFFS
- 1" SHIELDVAC HOSE W/CUFFS
- 3/4" SHIELDVAC HOSE W/CUFFS
- 1-1/2" SHIELDFLEX HOSE
- 5/8" SHIELDFLEX HOSE
- 3/4" BLACK WATER HOSE
- 5/8" WHITE HOSE W/BLUE TRACER
- FUEL FEED & OVERFLOW HOSE
- POLYBUTYLENE TUBING DRAINS