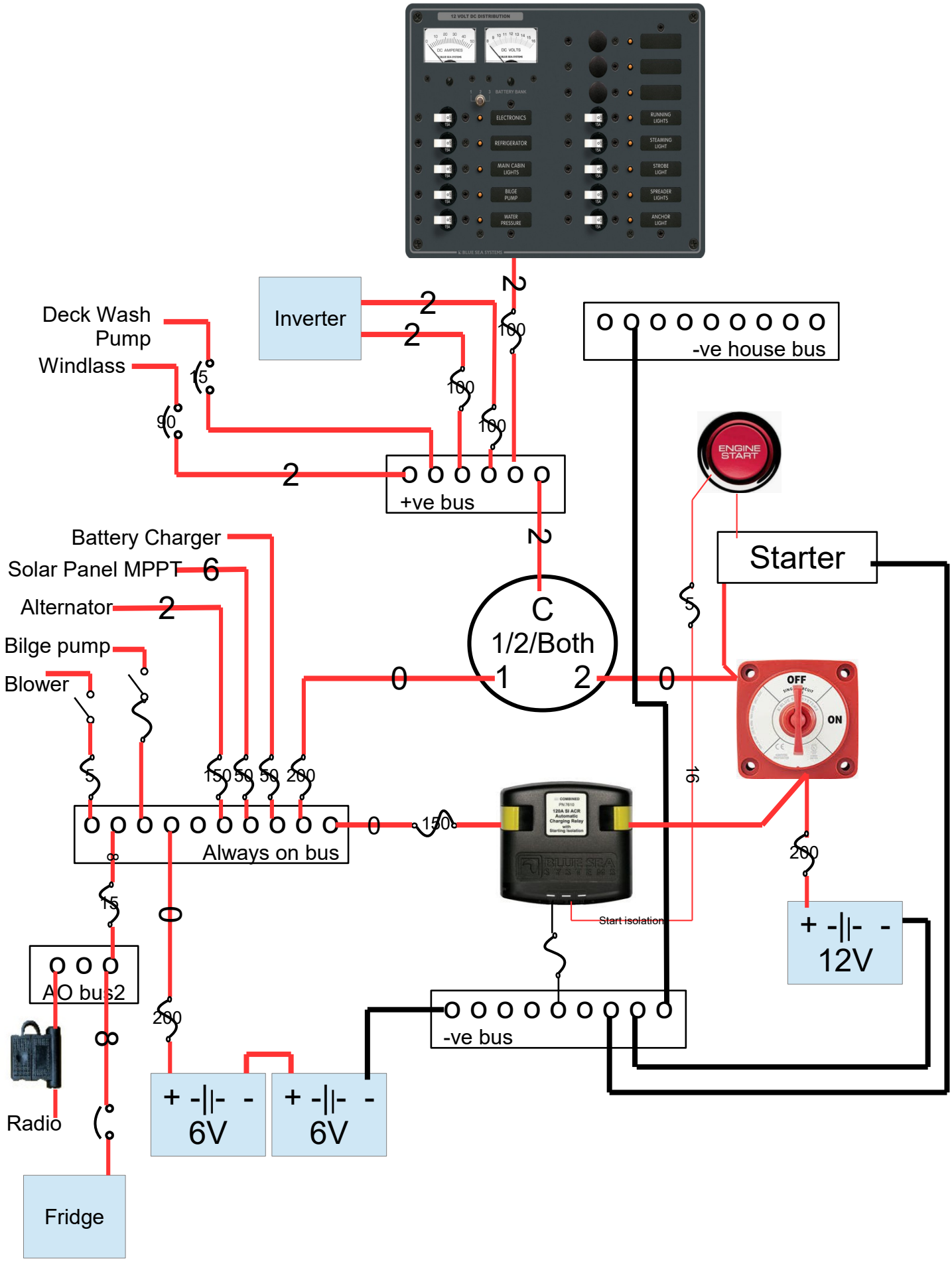
12 VOLT DC DISTRIBUTION
DC AMPERES
DC VOLTS
BATTERY BANK
ELECTRONICS
REFRIGERATOR
MAIN CABIN LIGHTS
BILGE PUMP
WATER PRESSURE
RUNNING LIGHTS
STEAMING LIGHT
STROBE LIGHT
SPREADER LIGHTS
ANCHOR LIGHT
Inverter
Deck Wash Pump
Windlass
-ve house bus
+ve bus
ENGINE START
Starter
Battery Charger
Solar Panel MPPT
Alternator
Bilge pump
Blower
C
1/2/Both
OFF
ON
Always on bus
Start isolation
12V
AO bus2
-ve bus
6V
6V
Radio
Fridge