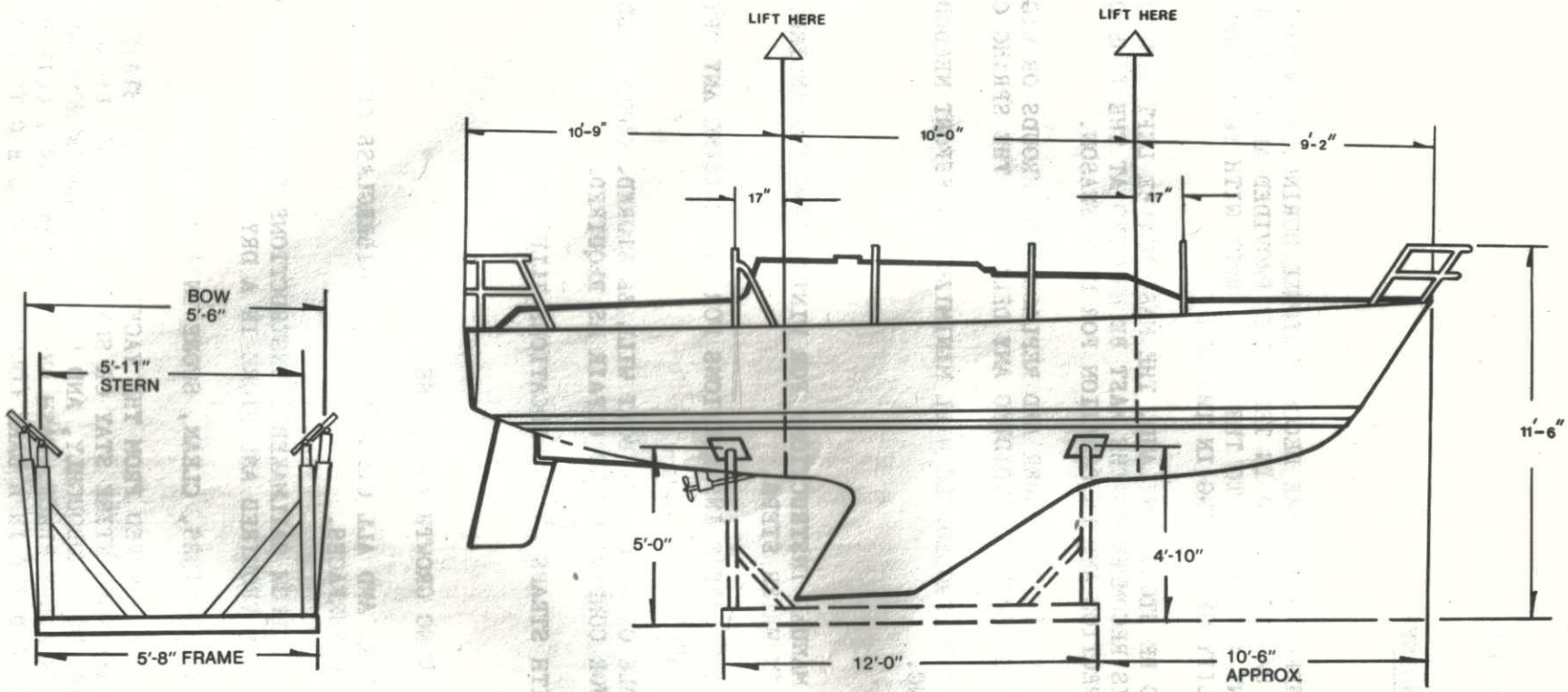

CATALINA YACHTS INC.
21200 VICTORY BLVD.
WOODLAND HILLS, CA

DIMENSIONS FOR LIFTING PROCEEDURE

CATALINA 30 OWNERS MANUAL 5.1