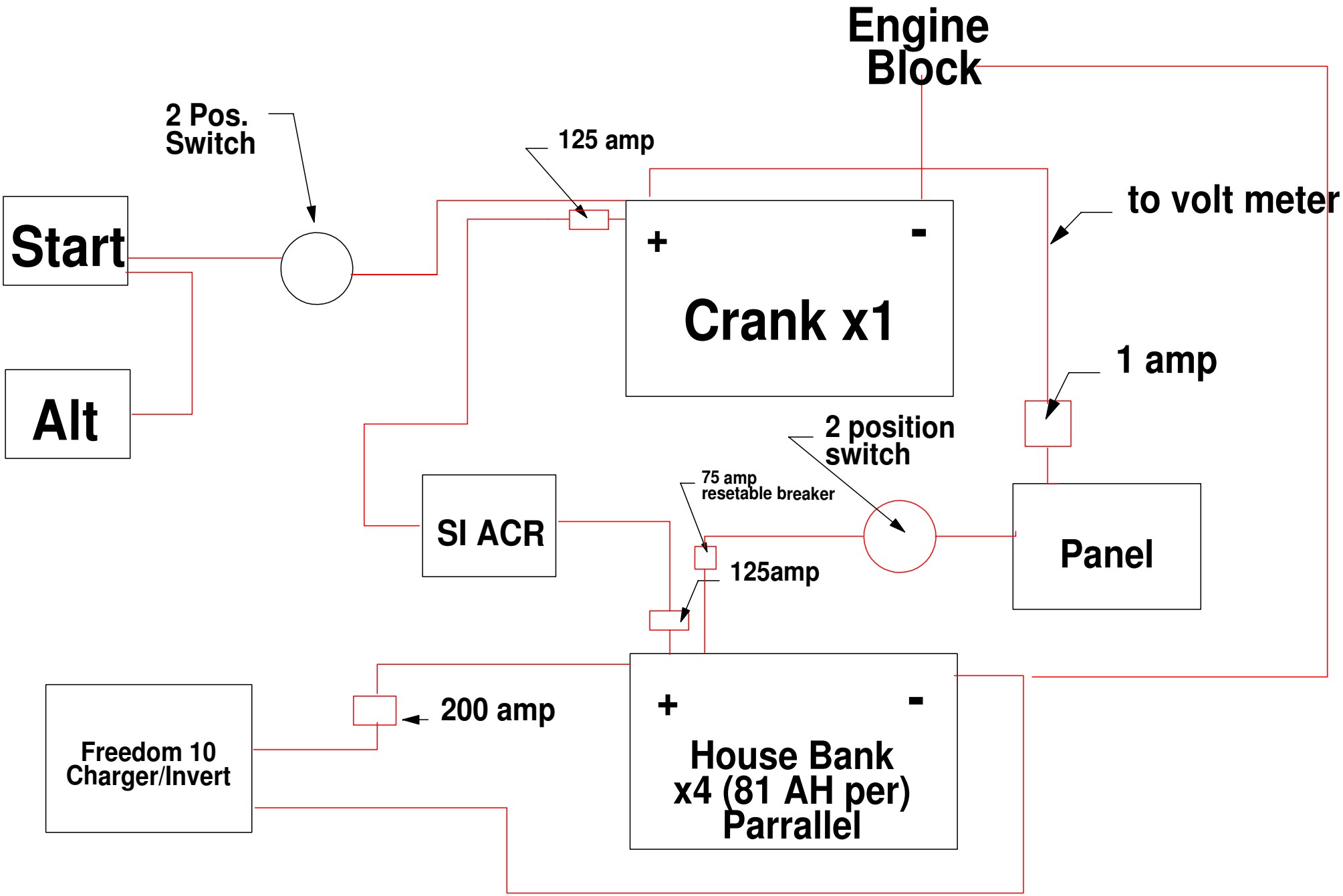

All postive circuits have 125 amp fuses at the posts