0CF10-G50602

Fig.60. GENERATOR

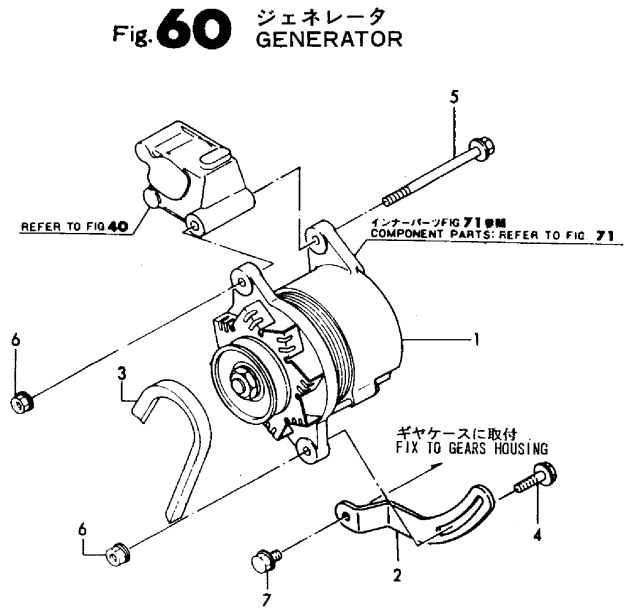

0CF10-G50602

60. GENERATOR

(A)=3GM30
(B)=3GM30VE
(C)=3GM30B
(D)=3GM30C
(E)=3GM30F
(F)=3GM30FVE

REF.	LEV.	PARTS NO.	DESCRIPTION	Q'TY (A)	(B)	(C)	(D)	(E)	(F)	I	R
1	1	129772-77200	GENERATOR(12V-55A)	1	1	1	1				
2	1	128271-77330	ADJUSTER, BELT	1	1	1	1				
3	1	128670-77350	V-BELT (A-31)	1	1	1	1				
4	1	26106-080302	BOLT M 8X 30 PLATED	1	1	1	1				
5	1	128271-77340	BOLT M 8X120	1	1	1	1				
6	1	26366-080002	NUT M 8	2	2	2	2				
7	1	26106-100162	BOLT M10X 16 PLATED	1		1	1			Z	
	(A=EXXX)		(C=EXXX) (D=EXXX)								

N:Old ←Yes/No→ New, Q:Old ←No/Yes→ New, R:Old ←Yes/Yes→ New, S:Old ←No/No→ New, W:Add, Z:Discontinued, F:Interchangeable by set, K:Q'ty Change

(C)Copy Rights YANMAR CO.,LTD.