2-1.2 Cooling water pump of engine models 2GM and 3GM(D)

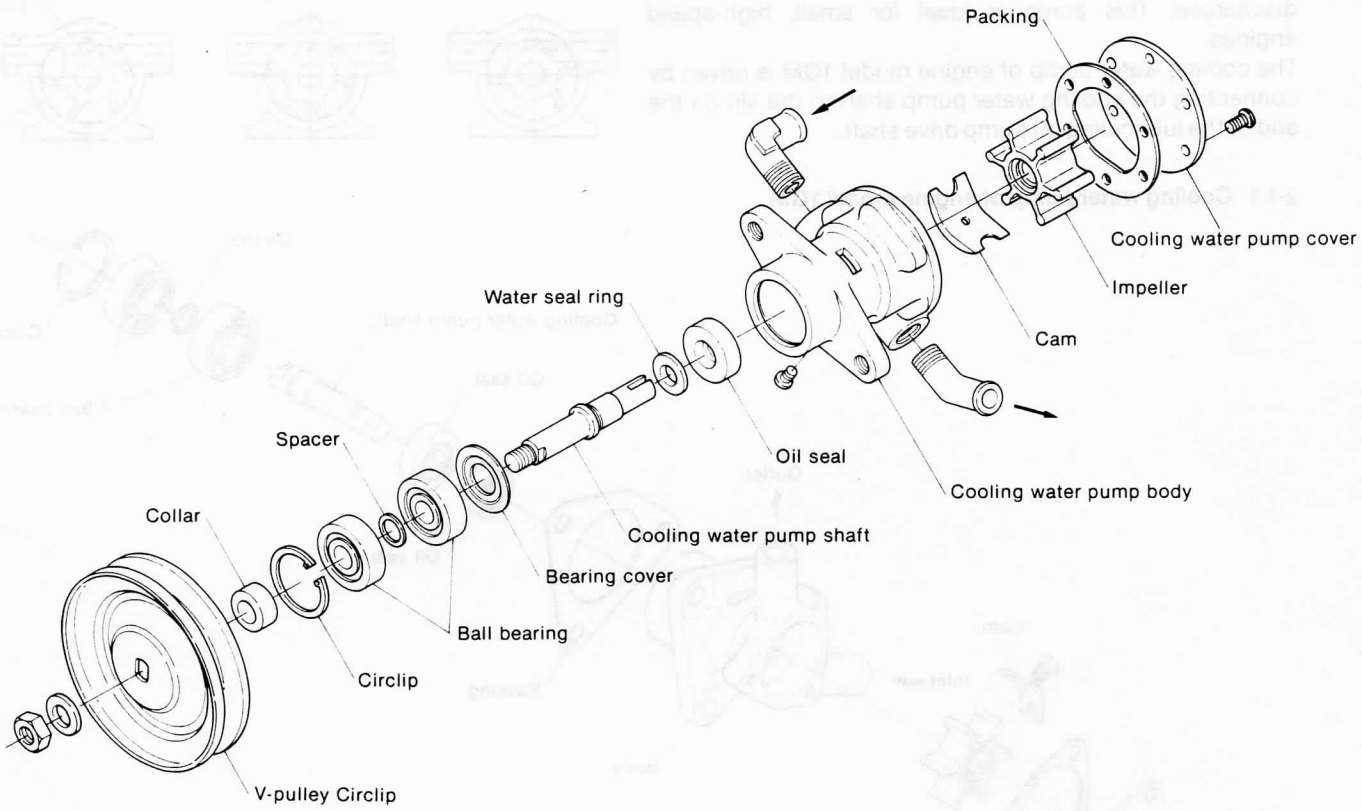

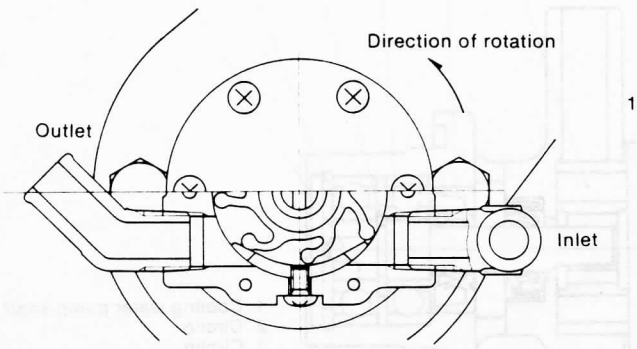

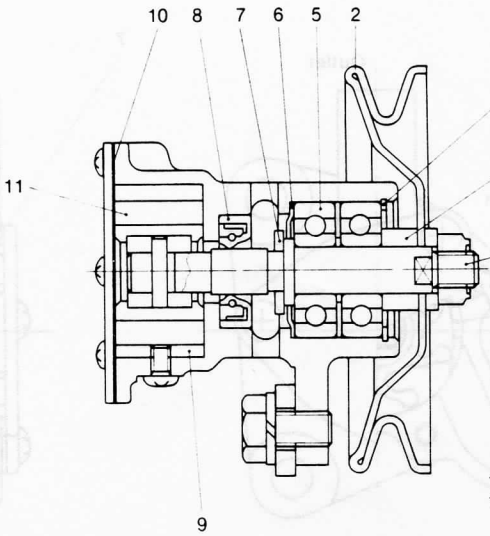

1. Cooling water pump shaft
2. V-pulley
3. Circlip
4. Collar
5. Ball bearing
6. Bearing cover
7. Water seal ring
8. Oil seal
9. Cam
10. Packing
11. Impeller